SAF INTRADISC *plus* - from 08/2000

SAF INTRAAX *plus* - from 01/2001

SAF

Contents

GENERAL INFORMATION

– Type codes for Module and INTRA series air suspension assemblies
– Overview of ride heights for INTRADISC *plus*
– Overview of ride heights for INTRADISC *plus* with steered trailing axle
– Track width/spring centre combinations for INTRADISC *plus* with steered trailing axles
– Overview of ride heights for INTRAAX *plus*
– Permitted centre of gravity heights IO/IU

AIR SUSPENSION SERIES – ON ROAD

INTRAAX *plus* - rigid axles with drum brakes for 22.5” wheels

Air suspension series IU / 33
Air suspension series IU / 28
Air suspension series IO / 33
Air suspension series IO / 28

INTRADISC *plus* - rigid axles with disc brakes for 19.5” and 22.5” wheels

Air suspension series IU / 33
Air suspension series IU / 28
Air suspension series IO / 33
Air suspension series IO / 28

INTRADISC *plus* - rigid axles with disc brakes for 22.5” wheels

Air suspension series IU / 33
Air suspension series IU / 28
Air suspension series IO / 33
Air suspension series IO / 28

INTRADISC *plus* - steered trailing axles with disc brakes for 19.5” and 22.5” wheels

Air suspension series IU / 33 with hanger bracket
Air suspension series IU / 28 with hanger bracket
Air suspension series IO / 33 with hanger bracket
Air suspension series IO / 28 with hanger bracket
Air suspension series IU / 33 with crossmember
Air suspension series IU / 28 with crossmember
Air suspension series IO / 33 with crossmember
Air suspension series IO / 28 with crossmember

INTRADISC *plus* - steered trailing axles with disc brakes for 22.5” wheels

Air suspension series IU / 33 with hanger bracket
Air suspension series IU / 28 with hanger bracket
Air suspension series IO / 33 with hanger bracket
Air suspension series IO / 28 with hanger bracket
Air suspension series IU / 33 with crossmember
Air suspension series IU / 28 with crossmember
Air suspension series IO / 33 with crossmember
Air suspension series IO / 28 with crossmember

Contents

AIR SUSPENSION SERIES – OFF ROAD

INTRAAX *plus* - rigid axles with drum brakes for 22.5” wheels
Air suspension series IU / 27
Air suspension series IU / 31
Air suspension series IO / 27
Air suspension series IO / 31

INTRADISC *plus* -rigid axles with disc brakes for 19.5” and 22.5” wheels
Air suspension series IU / 27
Air suspension series IU / 31
Air suspension series IO / 27
Air suspension series IO / 31

INTRADISC *plus* - rigid axles with disc brakes for 22.5” wheels
Air suspension series IU / 27
Air suspension series IU / 31
Air suspension series IO / 27
Air suspension series IO / 31

AIR BAGS

– Air bag mounting - Air suspension series IO

– Air bag mounting - Air suspension series IU

– Air pressures for SAF air suspension INTRADISC *plus* series IU with air bag SAF 2619 V (max. diameter 300)

– Air pressures for SAF air suspension INTRADISC *plus* series IU with air bag SAF 2623 VK / 2923 V / 2918 V (max. diameter 350)

– Air pressures for SAF air suspension INTRADISC *plus* series IO with air bag SAF 2619 V (max. diameter 300)

– Air pressures for SAF air suspension INTRADISC *plus* series IO with air bag SAF 2623 VK / 2923 V / 2918 V (max. diameter 350)

– Air suspension components group – Ref. No. 3 228 1033 00

– Air suspension components group – Ref. No. 3 228 1028 01

– Air bag components group – Ref. No. 2 228 1028 01

– Air suspension components group – Ref. No. 3 228 1027 00

– Air bag components group – Ref. No. 2 228 1027 00

– Air suspension components group – Ref. No. 3 228 1031 00

– Air bag components group – Ref. No. 2 228 1031 00

Contents

HANGER BRACKETS AND CROSSMEMBERS

– Functional suspension arm, adjustable, for INTRADISC *plus* – (steel)
– Functional suspension arm, adjustable, for INTRADISC *plus* – (aluminium)

– INTRA hanger bracket – Information
– Aluminium hanger bracket assembly – IU/IO series – 200 high
– Aluminium hanger bracket assembly – IU/IO series – 250 high
– Aluminium hanger bracket assembly – IU/IO series – 300 high
– Aluminium hanger bracket assembly – IU/IO series – 350 high

– Crossmember – IU/IO series – 200 high
– Crossmember – IU/IO series – 250 high
– Crossmember – IU/IO series – 300 high

– Functional suspension arm in pavers – INTRADISC *plus* Type IO
– Air suspension brackets – INTRAAX *plus* / INTRADISC *plus*

SHOCK ABSORBERS

– INTRADISC *plus* – shock absorber ride heights
– INTRADISC *plus* – shock absorbers

AXLE LIFTS

– INTRA *plus* – two-side lift for steel hanger bracket
– INTRA *plus* – two-side lift for crossmember
– INTRA *plus* – two-side lift for aluminium hanger brackets

– Circuit diagram for two-side lift with lift axle control valve

RECOMMENDATIONS FOR REINFORCEMENTS

– Reinforcement suggestion for hanger bracket fixing to vehicle chassis
– Reinforcement suggestion for hanger bracket fixing to vehicle chassis

– Hanger bracket assembly – IU/IO series – 200 high
– Hanger bracket assembly – IU/IO series – 250 high
– Hanger bracket assembly – IU/IO series – 300 high
– Hanger bracket assembly – IU/IO series – 350 high

– Air bag brackets – welding recommendation
– Example: Installation of steered trailing axles in vehicle chassis

Contents

INSTALLATION RECOMMENDATIONS AND TIGHTENING TORQUES

– Tightening torques – Suspension arms-shock absorbers-air bags/steel hanger brackets

– Tightening torques – Suspension arms-shock absorbers-air bags/aluminium hanger brackets

– Installation situation for INTRADISC *plus* / INTRAAX *plus* shock absorbers

– Installation situation for INTRADISC *plus* IU/IO shock absorbers
Aluminium hanger bracket and suspension arm

– Installation situation for INTRADISC *plus* IU/IO shock absorbers
Crossmember and suspension arm / steered axle / V = 110

– Spare parts drawing for tightening torques

– Mounting of diaphragm brake cylinders and spring-loaded brake cylinders on SAF axles

– Installation instructions / welding instructions INTRADISC *plus*

GENERAL INFORMATION

– Information on surface coating of SAF components

– ABS installation

– SAF steered trailing axle with stabilisation damper
Description of design and function

– SAF steered trailing axle with stabilisation damper
Installation of the stabilisation damper

– Classification of exciter ring teeth to axle types

– Installation instructions for ABS cable

– Installation instructions for wear sensor cable for INTRADISC *plus*
with KNORR continuous wear indicator

– Wear sensing

– Wheel mounting for axle series SK RB 9022 / SK RB 9019

– Wheel mounting for steel wheels

– Wheel mounting for aluminium wheels

– SAF NEWS “SAF-O-meter”

– SAF NEWS “SAF-O-meter” - installation and position

– Axle assembly selection chart by vehicle type

– Cylinder overview INTRADISC *plus*

General Information

Type codes for Module and INTRA series air suspension assemblies

X X OO / OO OO X OO X ①

Type

Series

Overall height in cm

Hanger bracket height in cm

Air bag bracket height in cm

Trailing arm type

Air bag type number

Hanger bracket type

E = single-leaf spring
S = strengthened spring 43/43
N = trailing arm 38/38
without specification = with functional suspension arm (INTRA...)

27 = SAF 2918V Ø 350
28 = SAF 2923VK Ø 350
29 = SAF 2618V Ø 300
30 = SAF 2926V Ø 350
31 = SAF 2923V Ø 350
33 = SAF 2619V Ø 300

Q = crossmember
A = aluminium hanger bracket
without specification = steel hanger bracket

U = series with spring mounted under the axle – INTRA series (low ride height)
M = series with cranked spring mounted over the axle
O = series with spring mounted over the axle – INTRA series (high ride height)

I = with functional suspension arm **(INTRAAX *plus* series - from 01/2001 INTRADISC *plus* series - from 08/2000)**
P = with functional suspension arm (INTRADISC *plus* series - up to 08/2000)
X = with functional suspension arm (INTRAAX/INTRADISC series)
E = trailing arm L2 = 340 with spring mounted over the axle
L2 = 315 with spring mounted under the axle
H = with extended suspension arm fixing points and extended stroke
without specification = suspension arm with L2 = 385

① = Letters are marked with "X", numbers with "O"
Example: IO40/2505 33Q
U27/2904E31Q

Overview of ride heights for INTRADISC *plus*

Heights and weights with air bag Type 2619 V (E5 bag)
L2 = 385 mm and axle SK RB 9022 K/H

Series	Ride height (mm)	Hanger bracket (mm)	Air bag bracket (mm)	Lift / lower (mm)	Weight [1] (kg)
IU 25/2000 33	250	200	0	90/90	439
IU 28/2005 33	280	200	50	90/90	444
IU 30/2505 33	300	250	50	90/90	449
IU 33/2510 33	330	250	100	90/90	451
IU 35/3010 33	350	300	100	90/90	454
IO 35/2000 33	355	200	0	90/90	439
IO 37/2500 33	375	250	0	90/90	443
IO 40/2505 33	405	250	50	90/90	448
IO 42/3005 33	425	300	50	90/90	451
IO 45/3010 33	455	300	100	90/90	453
IO 47/3510 33	475	350	100	90/90	456
IO 50/3515 33	505	350	150	90/90	458

Heights and weights with air bag Type 2619 V (E5 bag)
L2 = 385 mm and axle SK RB 9019 W

Series	Ride height (mm)	Hanger bracket (mm)	Air bag bracket (mm)	Lift / lower (mm)	Weight [1] (kg)
IU 25/2000 33	250	200	0	90/90	391
IU 28/2005 33	280	200	50	90/90	396
IU 30/2505 33	300	250	50	90/90	401
IU 33/2510 33	330	250	100	90/90	403
IU 35/3010 33	350	300	100	90/90	406
IO 35/2000 33	355	200	0	90/90	391
IO 37/2500 33	375	250	0	90/90	395
IO 40/2505 33	405	250	50	90/90	400
IO 42/3005 33	425	300	50	90/90	403
IO 45/3010 33	455	300	100	90/90	405
IO 47/3510 33	475	350	100	90/90	408
IO 50/3515 33	505	350	150	90/90	410

Heights and weights with air bag Type 2923 VK (E2 bag)
L2 = 385 mm and axle SK RB 9022 K/H

Series	Ride height (mm)	Hanger bracket (mm)	Air bag bracket (mm)	Lift / lower (mm)	Weight [1] (kg)
IU 29/2000 28	290	200	0	100/100	447
IU 31/2500 28	310	250	0	100/100	450
IU 34/2505 28	340	250	50	100/100	455
IU 36/3005 28	360	300	50	100/100	459
IU 39/3010 28	390	300	100	100/100	461
IU 42/3015 28	420	300	150	100/100	463
IO 44/3000 28	440 (no lift)	300	0	95/105	453
IO 49/3505 28	490 (no lift)	350	50	95/105	461

Heights and weights with air bag Type 2923 VK (E2 bag)
L2 = 385 mm and axle SK RB 9019 W

Series	Ride height (mm)	Hanger bracket (mm)	Air bag bracket (mm)	Lift / lower (mm)	Weight [1] (kg)
IU 29/2000 28	290	200	0	100/100	399
IU 31/2500 28	310	250	0	100/100	402
IU 34/2505 28	340	250	50	100/100	407
IU 36/3005 28	360	300	50	100/100	411
IU 39/3010 28	390	300	100	100/100	413
IU 42/3015 28	420	300	150	100/100	415
IO 44/3000 28	440 (no lift)	300	0	95/105	405
IO 49/3505 28	490 (no lift)	350	50	95/105	413

1) Tolerance: + 0.75% (due to the manufacturing process and tolerance of the axle beam wall thickness (+ 1.4 mm).
Weight deviations lie within the permitted DIN tolerances for the respective manufacturing process.

Weights: without wheel nuts, without brake cylinders, without air connections, only for track/spring centre 2040/1300, only for steel hanger bracket.

IU suspension arm has the following L2 dimension: 385 mm
IO suspension arm has the following L2 dimensions: 385 mm and 340 mm
Offsets for the air bag on IU/IO suspension arm: 0 mm / 30 mm / 60 mm

Further variants on request!

Overview of ride heights for INTRADISC *plus* with steered trailing axle

Heights and weights with air bag Type 2619 V (E5 bag)
L2 = 385 mm and axle SK RLB 9022 K/H

Series	Ride height (mm)	Hanger bracket (mm)	Air bag bracket (mm)	Lift / lower (mm)	Weight [1] (kg)
IU 25/2000 33	250	200	0	90/90	651
IU 28/2005 33	280	200	50	90/90	656
IU 30/2505 33	300	250	50	90/90	661
IU 33/2510 33	330	250	100	90/90	663
IU 35/3010 33	350	300	100	90/90	666
IO 35/2000 33	355	200	0	90/90	651
IO 37/2500 33	375	250	0	90/90	655
IO 40/2505 33	405	250	50	90/90	660
IO 42/3005 33	425	300	50	90/90	662
IO 45/3010 33	455	300	100	90/90	664
IO 47/3510 33	475	350	100	90/90	667
IO 50/3515 33	505	350	150	90/90	669

Heights and weights with air bag Type 2923 VK (E2 bag)
L2 = 385 mm and axle SK RLB 9022 K/H

Series	Ride height (mm)	Hanger bracket (mm)	Air bag bracket (mm)	Lift / lower (mm)	Weight [1] (kg)
IU 29/2000 28	290	200	0	100/100	659
IU 31/2500 28	310	250	0	100/100	662
IU 34/2505 28	340	250	50	100/100	667
IU 36/3005 28	360	300	50	100/100	671
IU 39/3010 28	390	300	100	100/100	673
IU 42/3015 28	420	300	150	100/100	678
IO 44/3000 28	440 (no lift)	300	0	95/105	665
IO 49/3505 28	490 (no lift)	350	50	95/105	673

Heights and weights with air bag Type 2619 V (E5 bag)
L2 = 385 mm and axle SK RLB 9019 K/W

Series	Ride height (mm)	Hanger bracket (mm)	Air bag bracket (mm)	Lift / lower (mm)	Weight [1] (kg)
IU 25/2000 33	250	200	0	90/90	606
IU 28/2005 33	280	200	50	90/90	611
IU 30/2505 33	300	250	50	90/90	616
IU 33/2510 33	330	250	100	90/90	618
IU 35/3010 33	350	300	100	90/90	621
IO 35/2000 33	355	200	0	90/90	606
IO 37/2500 33	375	250	0	90/90	610
IO 40/2505 33	405	250	50	90/90	615
IO 42/3005 33	425	300	50	90/90	618
IO 45/3010 33	455	300	100	90/90	620
IO 47/3510 33	475	350	100	90/90	623
IO 50/3515 33	505	350	150	90/90	625

Overview of ride heights for INTRADISC *plus* with steered trailing axle

Heights and weights with air bag Type 2923 VK (E2 bag)
L2 = 385 mm and axle SK RLB 9019 K/W

Series	Ride height (mm)	Hanger bracket (mm)	Air bag bracket (mm)	Lift / lower (mm)	Weight [1] (kg)
IU 29/2000 28	290	200	0	100/100	614
IU 31/2500 28	310	250	0	100/100	617
IU 34/2505 28	340	250	50	100/100	623
IU 36/3005 28	360	300	50	100/100	626
IU 39/3010 28	390	300	100	100/100	628
IU 42/3015 28	420	300	150	100/100	633
IO 44/3000 28	440 (no lift)	300	0	95/105	620
IO 49/3505 28	490 (no lift)	350	50	95/105	628

1) Tolerance: + 0.75% (due to the manufacturing process and tolerance of the axle beam wall thickness (+ 1.4 mm).
Weight deviations lie within the permitted DIN tolerances for the respective manufacturing process.

Weights: without wheel nuts, without brake cylinders, without air connections, only for track/spring centre 2040/980, only for steel hanger bracket.

IU suspension arm has the following L2 dimension: 385 mm
IO suspension arm has the following L2 dimensions: 385 mm and 340 mm
Offsets for the air bag on IU/IO suspension arm: 0 mm / 30 mm / 60 mm

Track width/spring centre combinations for INTRADISC *plus* with steered trailing axles

SAF

– with hanger brackets for 9 t axle load

Track (mm)	Spring centre (mm)	Frame centre (mm)
2040	980	980
2090	980	980
2090	1030	1030
2140	1080	1080

– with crossmember
(110 mm offset and heights 200 mm / 250 mm / 300 mm) for 9 t axle load

Track (mm)	Spring centre (mm)	Frame centre (mm)
2040	980	1200
2090	980	1200
2140	1080	1300

– with crossmember
(160 mm offset and heights 200 mm / 250 mm / 300 mm) for 9 t axle load

Track (mm)	Spring centre (mm)	Frame centre (mm)
2040	980	1300
2090	980	1300
2140	1080	1400

Further variants on request!

Overview of ride heights for INTRAAX *plus*

Heights and weights with air bag Type 2619 V (E5 bag)
L2 = 385 mm and axle SK RS 9042 – SK 500 *plus* for 9 t axle load

Series	Ride height (mm)	Hanger bracket (mm)	Air bag bracket (mm)	Lift / lower (mm)	Weight [1] (kg)
IU 25/2000 33	250	200	0	90/90	408
IU 28/2005 33	280	200	50	90/90	414
IU 30/2505 33	300	250	50	90/90	418
IU 33/2510 33	330	250	100	90/90	420
IU 35/3010 33	350	300	100	90/90	423
IO 35/2000 33	355	200	0	90/90	409
IO 37/2500 33	375	250	0	90/90	413
IO 40/2505 33	405	250	50	90/90	418
IO 42/3005 33	425	300	50	90/90	421
IO 45/3010 33	455	300	100	90/90	423
IO 47/3510 33	475	350	100	90/90	427
IO 50/3515 33	505	350	150	90/90	429

Heights and weights with air bag Type 2923 VK (E2 bag)
L2 = 385 mm and axle SK RS 9042 – SK 500 *plus* for 9 t axle load

Series	Ride height (mm)	Hanger bracket (mm)	Air bag bracket (mm)	Lift / lower (mm)	Weight [1] (kg)
IU 29/2000 28	290	200	0	100/100	416
IU 31/2500 28	310	250	0	100/100	421
IU 34/2505 28	340	250	50	100/100	425
IU 36/3005 28	360	300	50	100/100	429
IU 39/3010 28	390	300	100	100/100	431
IU 42/3015 28	420	300	150	100/100	433
IO 44/3000 28	440 (no lift)	300	0	95/105	423
IO 49/3505 28	490 (no lift)	350	50	95/105	432

1) Tolerance: + 0.75% (due to the manufacturing process and tolerance of the axle beam wall thickness (+ 1.4 mm).
Weight deviations lie within the permitted DIN tolerances for the respective manufacturing process.

Weights: for track width / spring centre 2040/1300, with automatic slack adjuster (7.5 kg per axle), without wheel nuts, for steel hanger bracket.

IU suspension arm has the following L2 dimension: 385 mm
IO suspension arm has the following L2 dimensions: 385 mm and 340 mm
Offsets for the air bag on IU/IO suspension arm: 0 mm / 30 mm / 60 mm

Further variants on request!

Permitted centre of gravity heights IO / IU

Axle load	Air suspension type	Centre of gravity height with bracket distance		
		⭘ 980	1200	1300
8000 kg	U	2150	3400	3950
	O	2250	3500	4050
9000 kg	U	2050	3050	3500
	O	2150	3150	3600

Note: All dimensions in mm ⭘ Steered trailing axle

Centre of gravity height = Distance between road and centre of gravity of sprung mass

The centre of gravity heights shown are based on the following data:

- Standard track widths and axle cross-sections refer to the relevant functional suspension arm centerline and axle load
- 0.34 g lateral acceleration
- Body roll approx. 3.5°, not allowing for the body tilt and tyre deflection
- Tyre sizes with static radius of approx. 500 mm
  (with smaller tyres, the permissible centre of gravity height will be reduced accordingly)
- Stationary load

For vehicles with suspended loads or tank vehicles (in particular vehicles for hazardous goods transport) we recommend a suspension assembly for an approx. 20 % larger centre of gravity height than the calculated vehicle centre of gravity height.

Air Suspension Series
ON ROAD

Rigid axles with drum brakes
for 22.5” wheels

Nominal ride height 250 - 350 mm
Air bag SAF 2619 V

ON ROAD

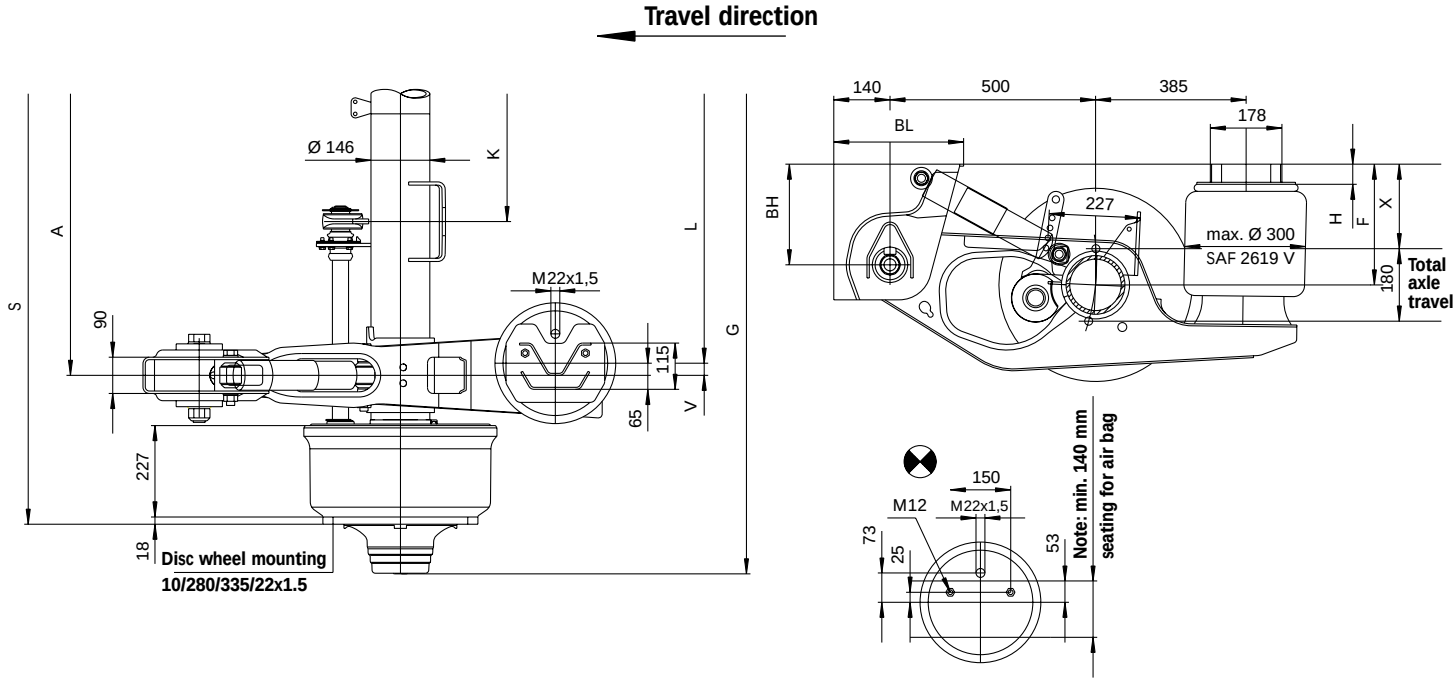

Air suspension type	F Nominal ride height	Ride height range for single axles	for axle assemblies	for axle assemblies with lift	X (overall height) unladen aithout air	laden without air	BH hanger bracket	BL hanger bracket	H air sus-pension bracket	Weight approx.[1]
IU 25/2000 33	250	220-270	230-270	260-270	160	145	200	310	⊗ 0	---
IU 28/2005 33	280	250-300	260-300	290-300	190	175	200	310	50	---
IU 30/2505 33	300	270-320	280-320	310-320	210	195	250	323	50	---
IU 33/2510 33	330	300-350	310-350	340-350	240	225	250	323	100	---
IU 35/3010 33	350	320-370	330-370	360-370	260	245	300	337	100	---

Axle type/axle load/brakes Tyres (example)	S / A Track width / bracket centre	G Axle width	K Baseplate centre	V Offset	L Air bag centre	Weight approx.[1]
SK RS 9042	2040/1200	2287	478 [3]	0	1200	
9000 kg				30	1140	
SNK 420 x 180				60	1080	
385 / 65 R 22.5	2040/1300	2287	536 [3]	30	1240	
				60	1180	
	2090/1300	2337	586 [3]	0	1300 [2]	
				30	1240	
				60	1180	

Lengths in mm, weights in kg

1) = without wheel nuts and linkage adjusters
Weight deviations lie within the permitted DIN tolerances for the respective manufacturing process.
2) = Max. possible tyre size 385/65 R 22.5 (distance between tyre and air bag!)
3) = Spring-loaded brake cylinders can be fitted

Ref. No.: IU-33-SKRS9042

Nominal ride height 290 - 420 mm
Air bag SAF 2923 VK

ON ROAD

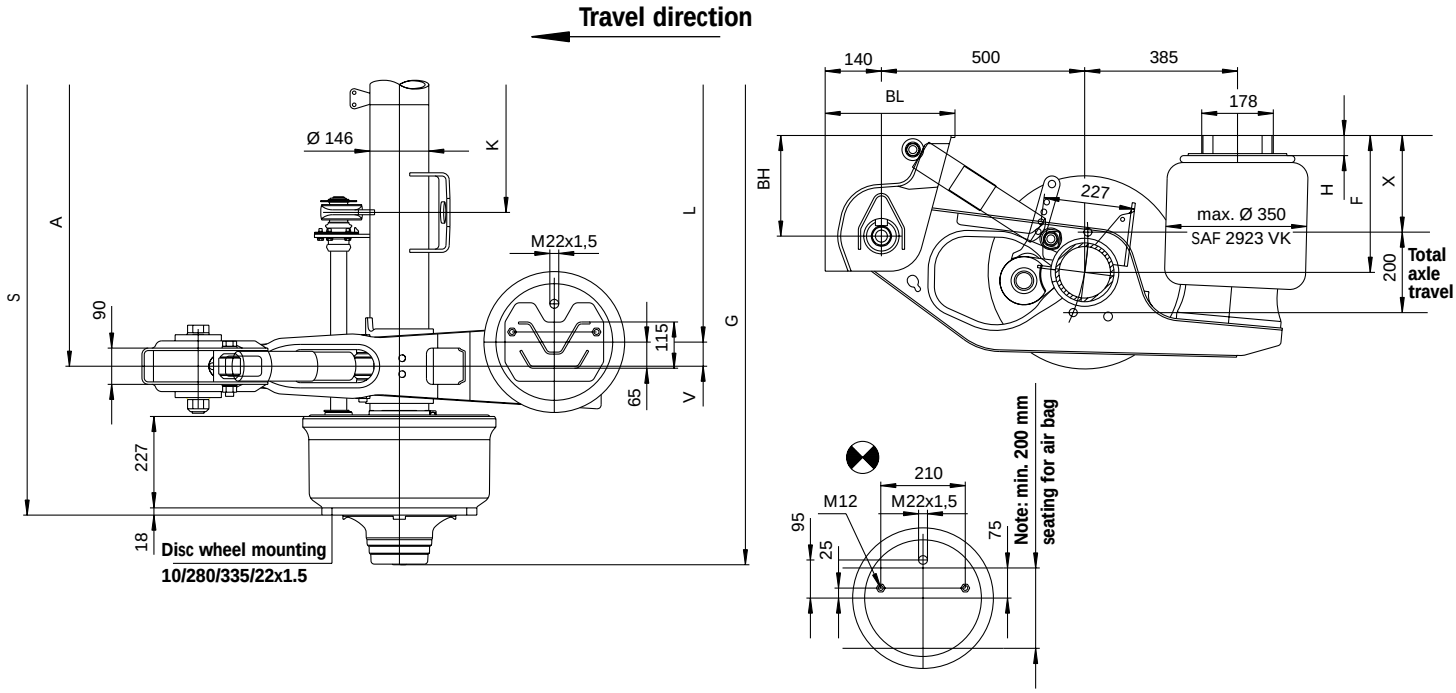

Air suspension type	F Nominal ride height	Ride height range for single axles	for axle assemblies	for axle assemblies with lift	X (overall height) unladen aithout air	laden without air	BH hanger bracket	BL hanger bracket	H air sus-pension bracket	Weight approx.[1]
IU 29/2000 28	290	250-320	260-320	290-320	190	175	200	310	⊗ 0	---
IU 31/2500 28	310	270-340	280-340	310-340	210	195	250	323	⊗ 0	---
IU 34/2505 28	340	300-370	310-370	340-370	240	225	250	323	50	---
IU 36/3005 28	360	320-390	330-390	360-390	260	245	300	337	50	---
IU 39/3010 28	390	350-420	360-420	390-420	290	275	300	337	100	---
IU 42/3015 28	420	380-450	390-450	420-450	320	305	300	337	150	---

Axle type/axle load/brakes Tyres (example)	S / A Track width / bracket centre	G Axle width	K Baseplate centre	V Offset	L Air bag centre	Weight approx.[1]
SK RS 9042	2040/1200	2287	478 [3]	0	1200 [2]	
9000 kg				30	1140	
SNK 420 x 180				60	1080	
385 / 65 R 22.5	2040/1300	2287	536 [3]	60	1180	
	2090/1300	2337	586 [3]	30	1240	
				60	1180	

Lengths in mm, weights in kg

1) = without wheel nuts and linkage adjusters
Weight deviations lie within the permitted DIN tolerances for the respective manufacturing process.
2) = Max. possible tyre size 385/65 R 22.5 (distance between tyre and air bag!)
3) = Spring-loaded brake cylinders can be fitted

Ref. No.: IU-28-SKRS9042

Nominal ride height 355 - 505 mm
Air bag SAF 2619 V

ON ROAD

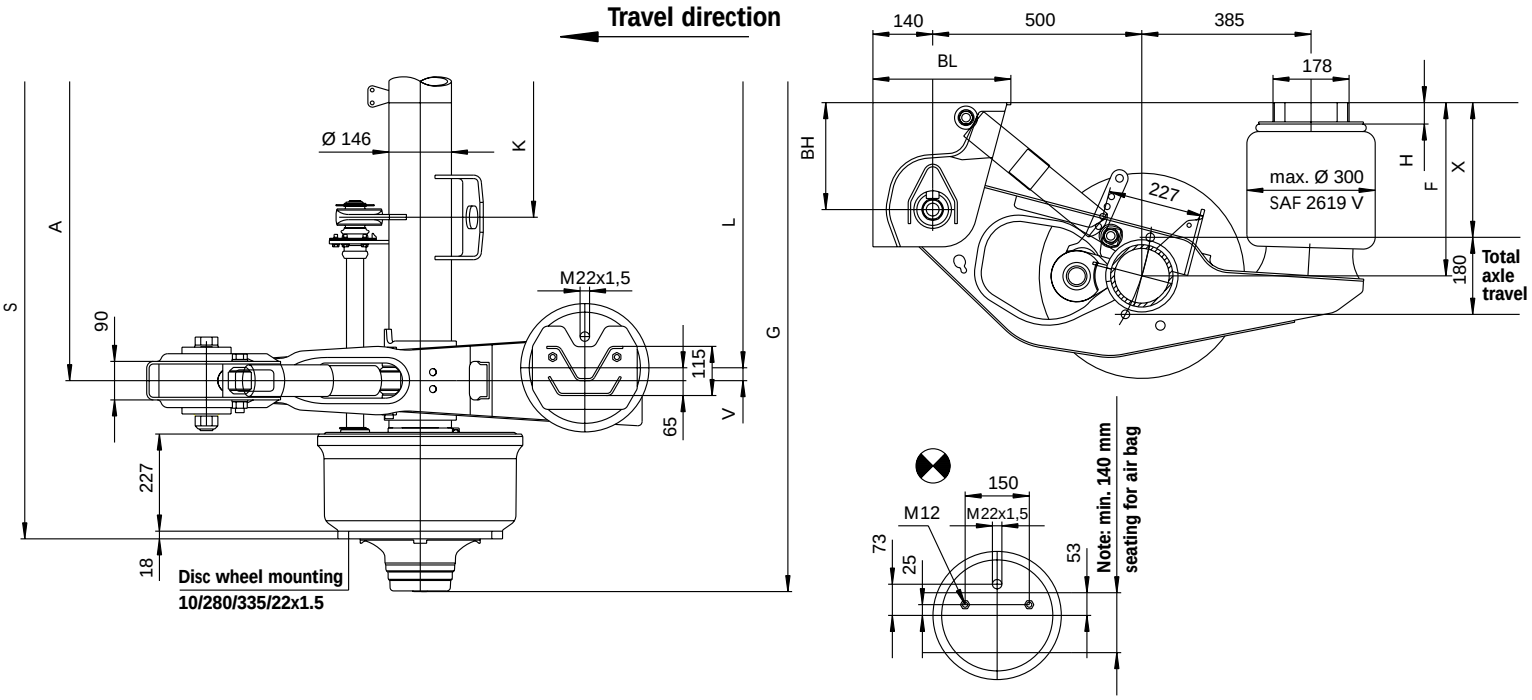

Air suspension type	F Nominal ride height	Ride height range for single axles	for axle assemblies	for axle assemblies with lift	X (overall height) unladen aithout air	laden without air	BH hanger bracket	BL hanger bracket	H air sus-pension bracket	Weight approx.[1]
IO 35/2000 33	355	325-375	335-375	365-375	265	250	200	310	⊗ 0	---
IO 37/2500 33	375	345-395	355-395	385-395	285	270	250	323	⊗ 0	---
IO 40/2505 33	405	375-425	385-425	415-425	315	300	250	323	50	---
IO 42/3005 33	425	395-445	405-445	435-445	335	320	300	337	50	---
IO 45/3010 33	455	425-475	435-475	465-475	365	350	300	337	100	---
IO 47/3510 33	475	445-495	455-495	485-495	385	370	350	350	100	---
IO 50/3515 33	505	475-525	485-525	515-525	415	400	350	350	150	---

Axle type/axle load/brakes Tyres (example)	S / A Track width / bracket centre	G Axle width	K Baseplate centre	V Offset	L Air bag centre	Weight approx.[1]
SK RS 9042	2040/1200	2287	478 [3]	0	1200	
9000 kg				30	1140	
SNK 420 x 180				60	1080	
385 / 65 R 22.5	2040/1300	2287	536 [3]	30	1240	
				60	1180	
	2090/1300	2337	586 [3]	0	1300 [2]	
				30	1240	
				60	1180	

Lengths in mm, weights in kg

1) = without wheel nuts and linkage adjusters
Weight deviations lie within the permitted DIN tolerances for the respective manufacturing process.
2) = Max. possible tyre size 385/65 R 22.5 (distance between tyre and air bag!)
3) = Spring-loaded brake cylinders can be fitted

Ref. No.: IO-33-SKRS9042

Nominal ride height 440 + 490 mm
Air bag SAF 2923 VK

ON ROAD

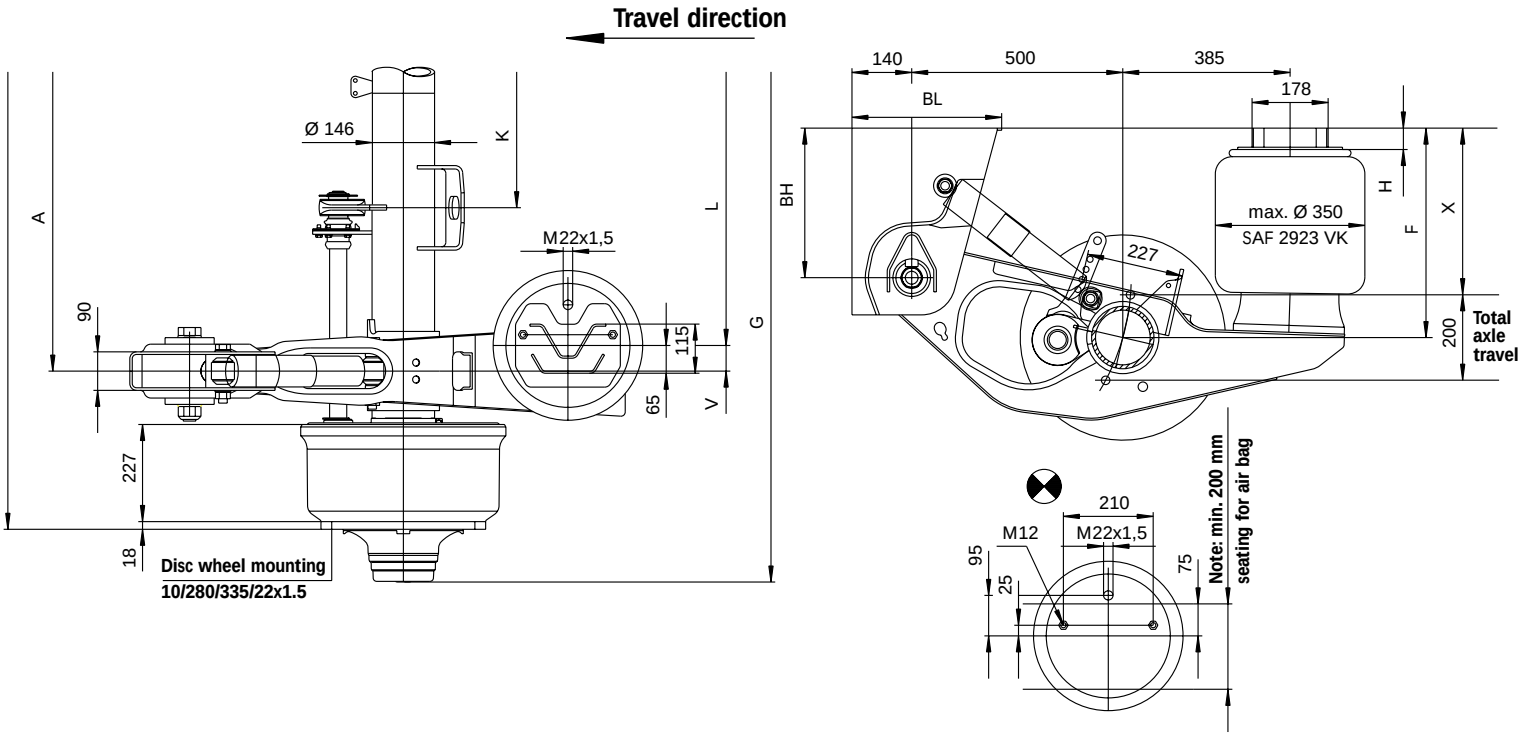

Air suspension type	F Nominal ride height	Ride height range for single axles	for axle assemblies	for axle assemblies with lift	X (overall height) unladen aithout air	laden without air	BH hanger bracket	BL hanger bracket	H air sus-pension bracket	Weight approx.[1]
IO 44/3000 28	440	395-465	405-465	---	335	320	300	337	⊗ 0	---
IO 49/3505 28	490	445-515	455-515	---	385	370	350	350	50	---

Axle type/axle load/brakes Tyres (example)	S / A Track width / bracket centre	G Axle width	K Baseplate centre	V Offset	L Air bag centre	Weight approx.[1]
SK RS 9042	2040/1200	2287	478 [3]	0	1200 [2]	
9000 kg				30	1140	
SNK 420 x 180				60	1080	
385 / 65 R 22.5	2040/1300	2287	536 [3]	60	1180	
	2090/1300	2337	586 [3]	30	1240	
				60	1180	

Lengths in mm, weights in kg

1) = without wheel nuts and linkage adjusters
Weight deviations lie within the permitted DIN tolerances for the respective manufacturing process.
2) = Max. possible tyre size 385/65 R 22.5 (distance between tyre and air bag!)
3) = Spring-loaded brake cylinders can be fitted

Ref. No.: IO-28-SKRS9042

Air Suspension Series
ON ROAD

Rigid axles with disc brakes
for 22.5” and 19.5” wheels

Nominal ride height 250 - 350 mm
Air bag SAF 2619 V

ON ROAD

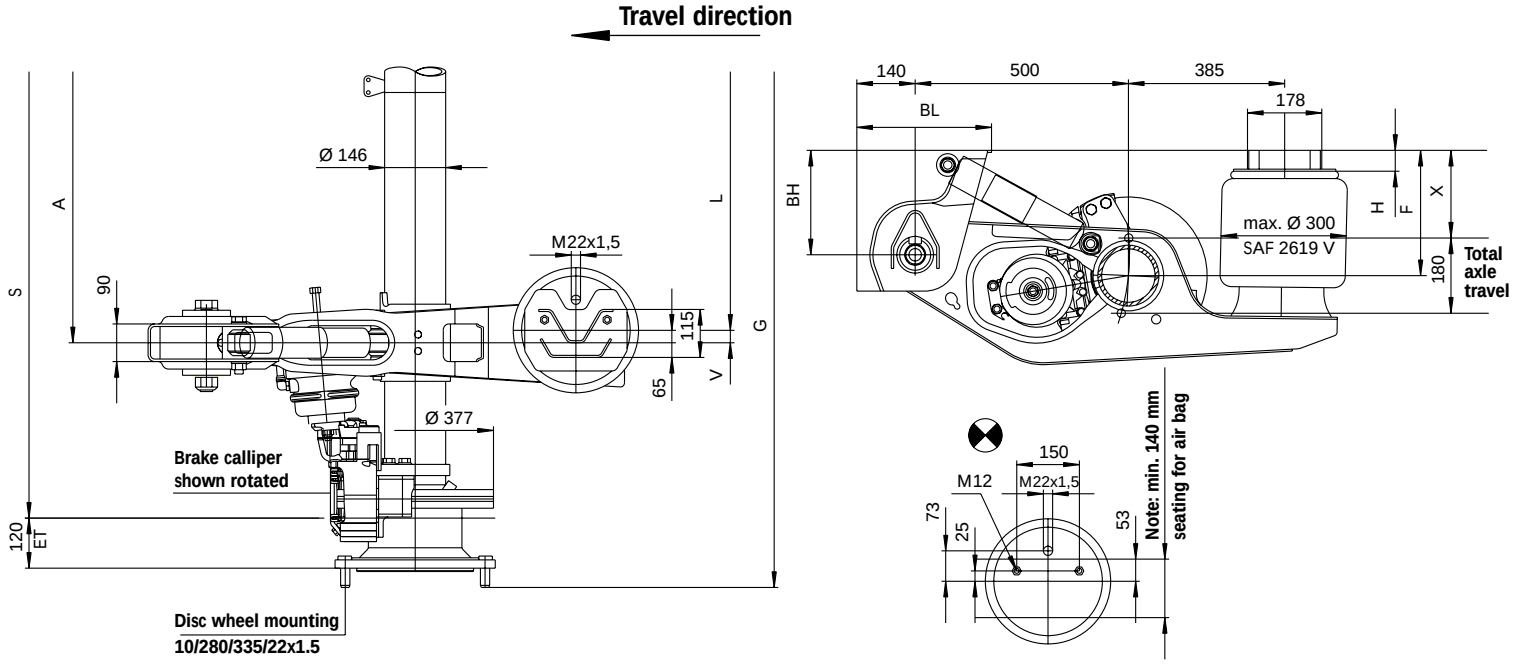

Air suspension type	F Nominal ride height	Ride height range for single axles	for axle assemblies	for axle assemblies with lift	X (overall height) unladen aithout air	laden without air	BH hanger bracket	BL hanger bracket	H air sus-pension bracket	Weight approx.[1]
IU 25/2000 33	250	220-270	230-270	260-270	160	145	200	310	⊗ 0	391
IU 28/2005 33	280	250-300	260-300	290-300	190	175	200	310	50	396
IU 30/2505 33	300	270-320	280-320	310-320	210	195	250	323	50	401
IU 33/2510 33	330	300-350	310-350	340-350	240	225	250	323	100	403
IU 35/3010 33	350	320-370	330-370	360-370	260	245	300	337	100	406

Axle type/axle load/brakes Tyres (example)	S / A Track width / bracket centre	G Axle width	Tyres 385/65 R 22.5 V Offset	L Air bag centre	425/55 R 19.5 V Offset	L Air bag centre	Weight approx.[1]
SK RB 9019-10	2040/1200	2372	0	1200	0	1200	
ET = 120 mm			30	1140	30	1140	
9000 kg			60	1080	60	1080	
SB 1937-11S	2040/1300	2372	30	1240	30	1240 [3]	see assembly weight
385/65 R 22.5			60	1180	60	1180	
425/55 R 19.5	2090/1300	2422	0	1300 [2]	0	1300 [3]	
			30	1240	30	1240	
			60	1180	60	1180	

Lengths in mm, weights in kg

1) = without wheel nuts
Weight deviations lie within the permitted DIN tolerances for the respective manufacturing process.
2) = Max. possible tyre size 385/65 R 22.5 (distance between tyre and air bag!)
3) = Max. possible tyre size 425/55 R 19.5 (distance between tyre and air bag!)
Further tyre sizes on request

Ref. No.: IU-33-SKRB9019W-10

Nominal ride height 290 - 420 mm
Air bag SAF 2923 VK

ON ROAD

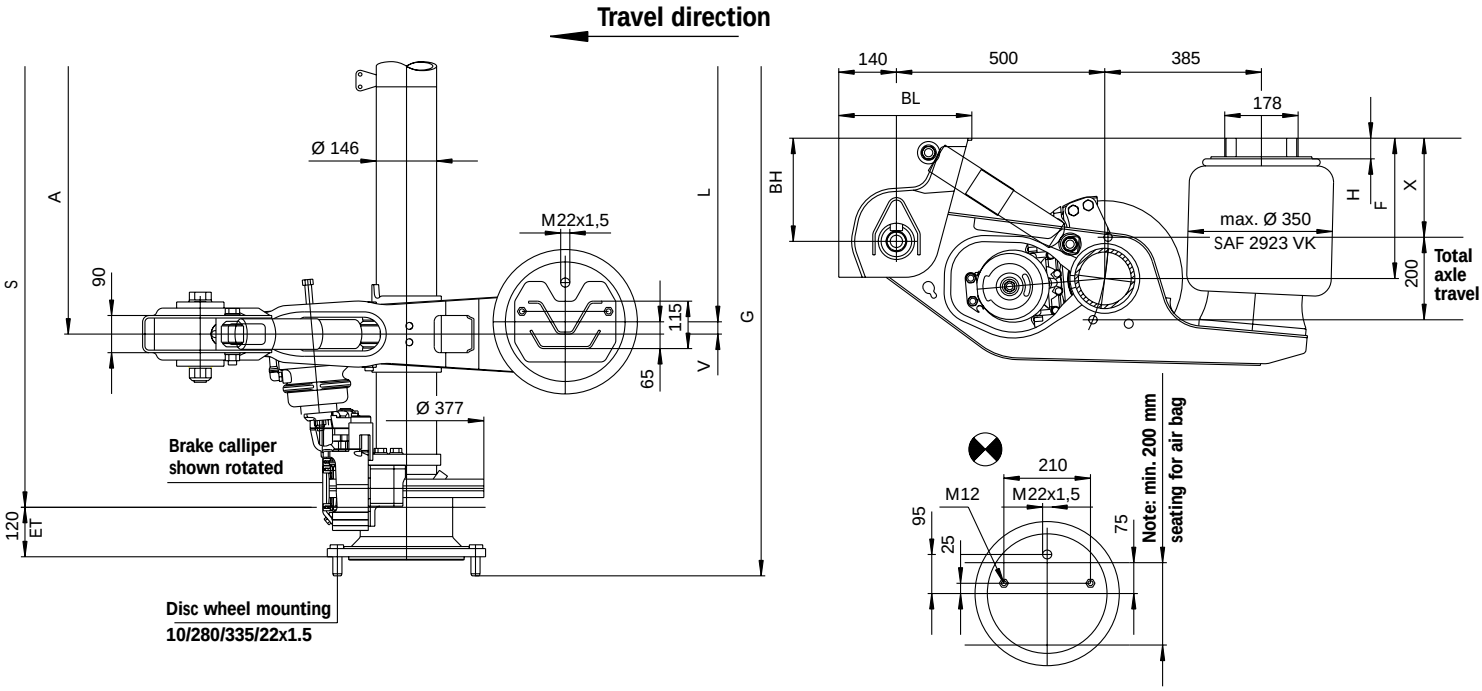

Air suspension type	F Nominal ride height	Ride height range for single axles	for axle assemblies	for axle assemblies with lift	X (overall height) unladen aithout air	laden without air	BH hanger bracket	BL hanger bracket	H air sus-pension bracket	Weight approx.[1]
IU 29/2000 28	290	250-320	260-320	290-320	190	175	200	310	⊗ 0	399
IU 31/2500 28	310	270-340	280-340	310-340	210	195	250	323	⊗ 0	402
IU 34/2505 28	340	300-370	310-370	340-370	240	225	250	323	50	407
IU 36/3005 28	360	320-390	330-390	360-390	260	245	300	337	50	411
IU 39/3010 28	390	350-420	360-420	390-420	290	275	300	337	100	413
IU 42/3015 28	420	380-450	390-450	420-450	320	305	300	337	150	415

Axle type/axle load/brakes Tyres (example)	S / A Track width / bracket centre	G Axle width	Tyres 385/65 R 22.5 V Offset	L Air bag centre	425/55 R 19.5 V Offset	L Air bag centre	Weight approx.[1]
SK RB 9019-10	2040/1200	2372	0	1200 [2]	0	1200 [3]	
ET = 120 mm			30	1140	30	1140	
9000 kg			60	1080	60	1080	
SB 1937-11S	2040/1300	2372	60	1180	60	1180 [3]	see assembly weight
385/65 R 22.5							
425/55 R 19.5	2090/1300	2422	30	1240	30	1240 [3]	
			60	1180	60	1180	

Lengths in mm, weights in kg

1) = without wheel nuts
Weight deviations lie within the permitted DIN tolerances for the respective manufacturing process.
2) = Max. possible tyre size 385/65 R 22.5 (distance between tyre and air bag!)
3) = Max. possible tyre size 425/55 R 19.5 (distance between tyre and air bag!)
Further tyre sizes on request

Ref. No.: IU-28-SKRB9019W-10

Nominal ride height 355 - 505 mm
Air bag SAF 2619 V

ON ROAD

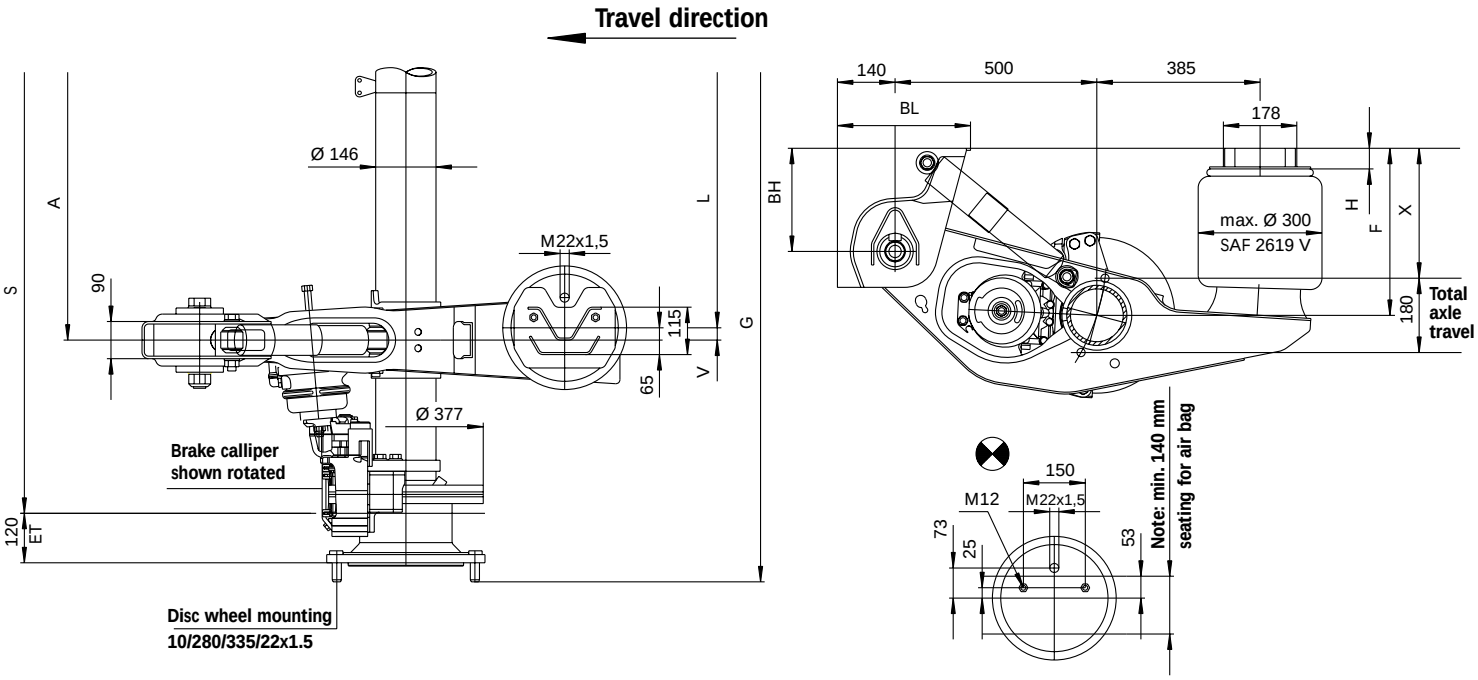

Air suspension type	F Nominal ride height	Ride height range for single axles	for axle assemblies	for axle assemblies with lift	X (overall height) unladen aithout air	laden without air	BH hanger bracket	BL hanger bracket	H air sus-pension bracket	Weight approx.[1]
IO 35/2000 33	355	325-375	335-375	365-375	265	250	200	310	⊗ 0	391
IO 37/2500 33	375	345-395	355-395	385-395	285	270	250	323	⊗ 0	395
IO 40/2505 33	405	375-425	385-425	415-425	315	300	250	323	50	400
IO 42/3005 33	425	395-445	405-445	435-445	335	320	300	337	50	403
IO 45/3010 33	455	425-475	435-475	465-475	365	350	300	337	100	405
IO 47/3510 33	475	445-495	455-495	485-495	385	370	350	350	100	408
IO 50/3515 33	505	475-525	485-525	515-525	415	400	350	350	150	410

Axle type/axle load/brakes Tyres (example)	S / A Track width / bracket centre	G Axle width	Tyres 385/65 R 22.5 V Offset	L Air bag centre	425/55 R 19.5 V Offset	L Air bag centre	Weight approx.[1]
SK RB 9019-10	2040/1200	2372	0	1200	0	1200	
ET = 120 mm			30	1140	30	1140	
9000 kg			60	1080	60	1080	
SB 1937-11S	2040/1300	2372	30	1240	30	1240 [3]	see assembly weight
385/65 R 22.5			60	1180	60	1180	
425/55 R 19.5	2090/1300	2422	0	1300 [2]	0	1300 [3]	
			30	1240	30	1240	
			60	1180	60	1180	

Lengths in mm, weights in kg

1) = without wheel nuts
Weight deviations lie within the permitted DIN tolerances for the respective manufacturing process.
2) = Max. possible tyre size 385/65 R 22.5 (distance between tyre and air bag!)
3) = Max. possible tyre size 425/55 R 19.5 (distance between tyre and air bag!)
Further tyre sizes on request

Ref. No.: IO-33-SKRB9019W-10

Nominal ride height 440 + 490 mm
Air bag SAF 2923 VK

ON ROAD

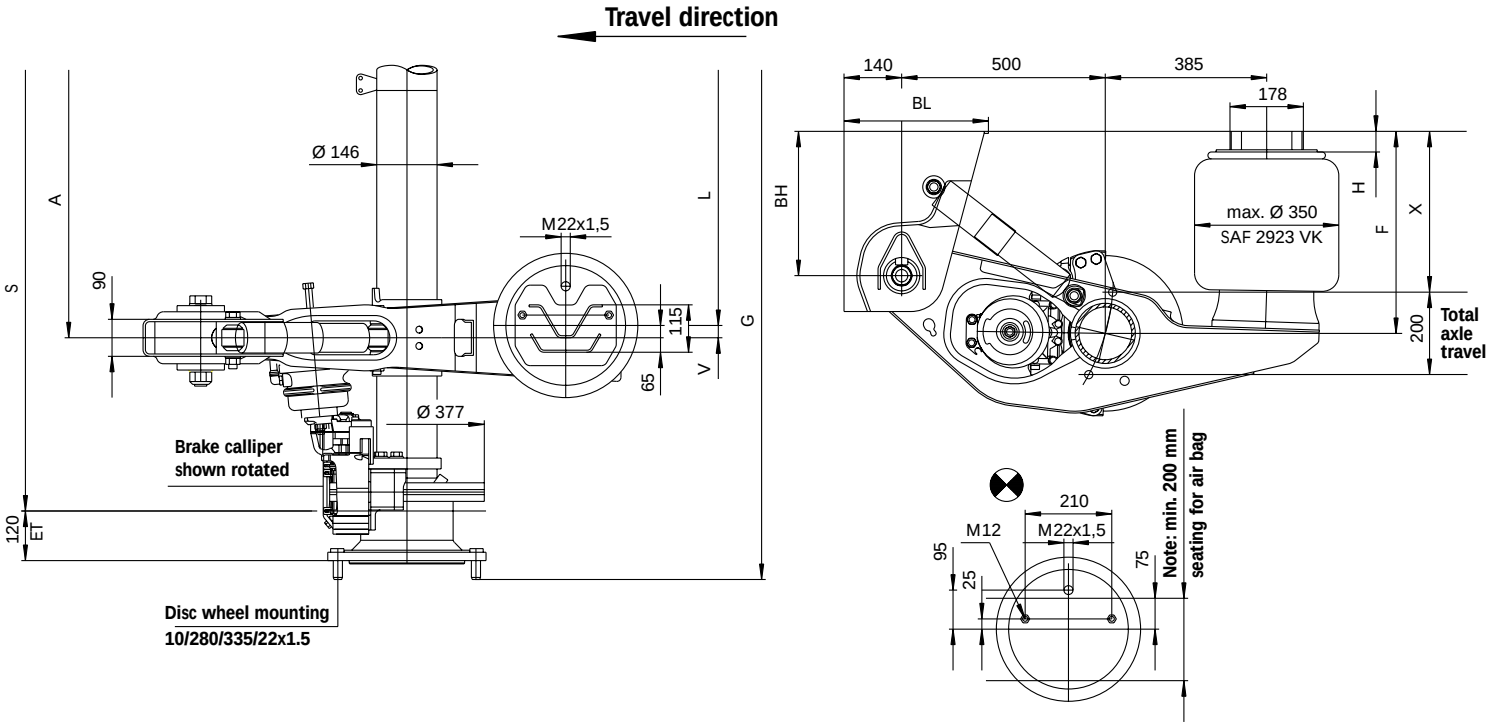

Air suspension type	F Nominal ride height	Ride height range for single axles	for axle assemblies	for axle assemblies with lift	X (overall height) unladen aithout air	laden without air	BH hanger bracket	BL hanger bracket	H air sus-pension bracket	Weight approx.[1]
IO 44/3000 28	440	395-465	405-465	---	335	320	300	337	⊗ 0	405
IO 49/3505 28	490	445-515	455-515	---	385	370	350	350	50	413

Axle type/axle load/brakes Tyres (example)	S / A Track width / bracket centre	G Axle width	Tyres 385/65 R 22.5 V Offset	L Air bag centre	425/55 R 19.5 V Offset	L Air bag centre	Weight approx.[1]
SK RB 9019-10	2040/1200	2372	0	1200 [2]	0	1200 [3]	
ET = 120 mm			30	1140	30	1140	
9000 kg			60	1080	60	1080	
SB 1937-11S	2040/1300	2372	60	1080	60	1080 [3]	see assembly weight
385/65 R 22.5							
425/55 R 19.5	2090/1300	2422	30	1240	30	1240 [3]	
			60	1180	60	1180	

Lengths in mm, weights in kg

1) = without wheel nuts
Weight deviations lie within the permitted DIN tolerances for the respective manufacturing process.
2) = Max. possible tyre size 385/65 R 22.5 (distance between tyre and air bag!)
3) = Max. possible tyre size 425/55 R 19.5 (distance between tyre and air bag!)
Further tyre sizes on request

Ref. No.: IO-28-SKRB9019W-10

Air Suspension Series
ON ROAD

Rigid axles with disc brakes
for 22.5” wheels

Nominal ride height 250 - 350 mm
Air bag SAF 2619 V

ON ROAD

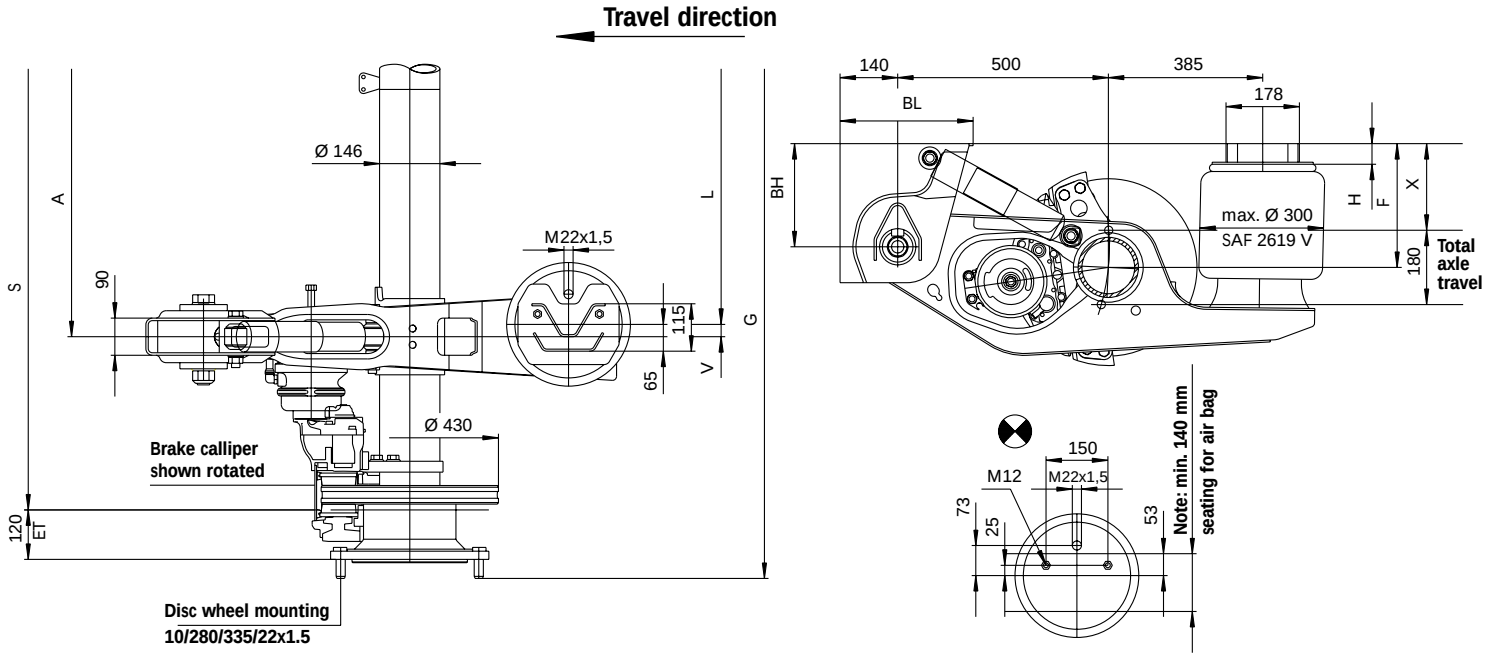

Air suspension type	F Nominal ride height	Ride height range for single axles	for axle assemblies	for axle assemblies with lift	X (overall height) unladen aithout air	laden without air	BH hanger bracket	BL hanger bracket	H air sus-pension bracket	Weight approx.[1]
IU 25/2000 33	250	220-270	230-270	260-270	160	145	200	310	⊗ 0	---
IU 28/2005 33	280	250-300	260-300	290-300	190	175	200	310	50	---
IU 30/2505 33	300	270-320	280-320	310-320	210	195	250	323	50	---
IU 33/2510 33	330	300-350	310-350	340-350	240	225	250	323	100	---
IU 35/3010 33	350	320-370	330-370	360-370	260	245	300	337	100	---

Axle type/axle load/brakes Tyres (example)	S / A Track width / bracket centre	G Axle width	V Offset	L Air bag centre	Weight approx.[1]
SK RB 9022	2040/1200	2372	0	1200	
ET = 120 mm			30	1080	
9000 kg			60	1090	
SB 2243-11S	2040/1300	2372	30	1240	see assembly weight
385/65 R 22.5			60	1180	
	2090/1300	2422	0	1300 [2]	
			30	1240	
			60	1180	

Lengths in mm, weights in kg

1) = without wheel nuts
Weight deviations lie within the permitted DIN tolerances for the respective manufacturing process
2) = Max. possible tyre size 385/65 R 22.5 (distance between tyre and air bag!)

Ref. No.: IU-33-SKRB9022K

Nominal ride height 290 - 420 mm
Air bag SAF 2923 VK

ON ROAD

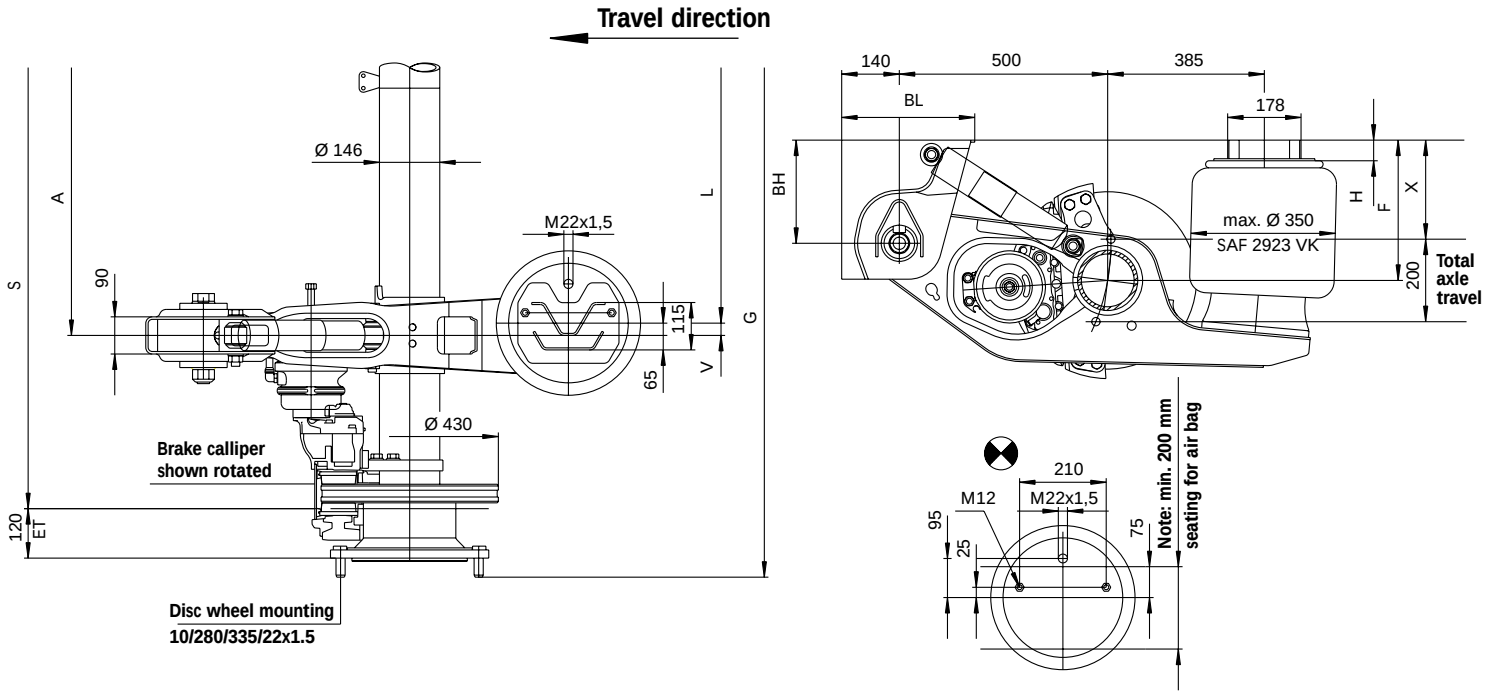

Air suspension type	F Nominal ride height	Ride height range for single axles	for axle assemblies	for axle assemblies with lift	X (overall height) unladen aithout air	laden without air	BH hanger bracket	BL hanger bracket	H air sus-pension bracket	Weight approx.[1]
IU 29/2000 28	290	250-320	260-320	290-320	190	175	200	310	⊗ 0	---
IU 31/2500 28	310	270-340	280-340	310-340	210	195	250	323	⊗ 0	---
IU 34/2505 28	340	300-370	310-370	340-370	240	225	250	323	50	---
IU 36/3005 28	360	320-390	330-390	360-390	260	245	300	337	50	---
IU 39/3010 28	390	350-420	360-420	390-420	290	275	300	337	100	---
IU 42/3015 28	420	380-450	390-450	420-450	320	305	300	337	150	---

Axle type/axle load/brakes Tyres (example)	S / A Track width / bracket centre	G Axle width	V Offset	L Air bag centre	Weight approx.[1]
SK RB 9022	2040/1200	2372	0	1200 [2]	
ET = 120 mm			30	1140	
9000 kg			60	1080	
SB 2243-11S	2040/1300	2372	60	1180	see assembly weight
385/65 R 22.5					
	2090/1300	2422	30	1240	
			60	1180	

Lengths in mm, weights in kg

1) = without wheel nuts
Weight deviations lie within the permitted DIN tolerances for the respective manufacturing process
2) = Max. possible tyre size 385/65 R 22.5 (distance between tyre and air bag!)

Ref. No.: IU-28-SKRB9022K

Nominal ride height 355 - 505 mm
Air bag SAF 2619 V

ON ROAD

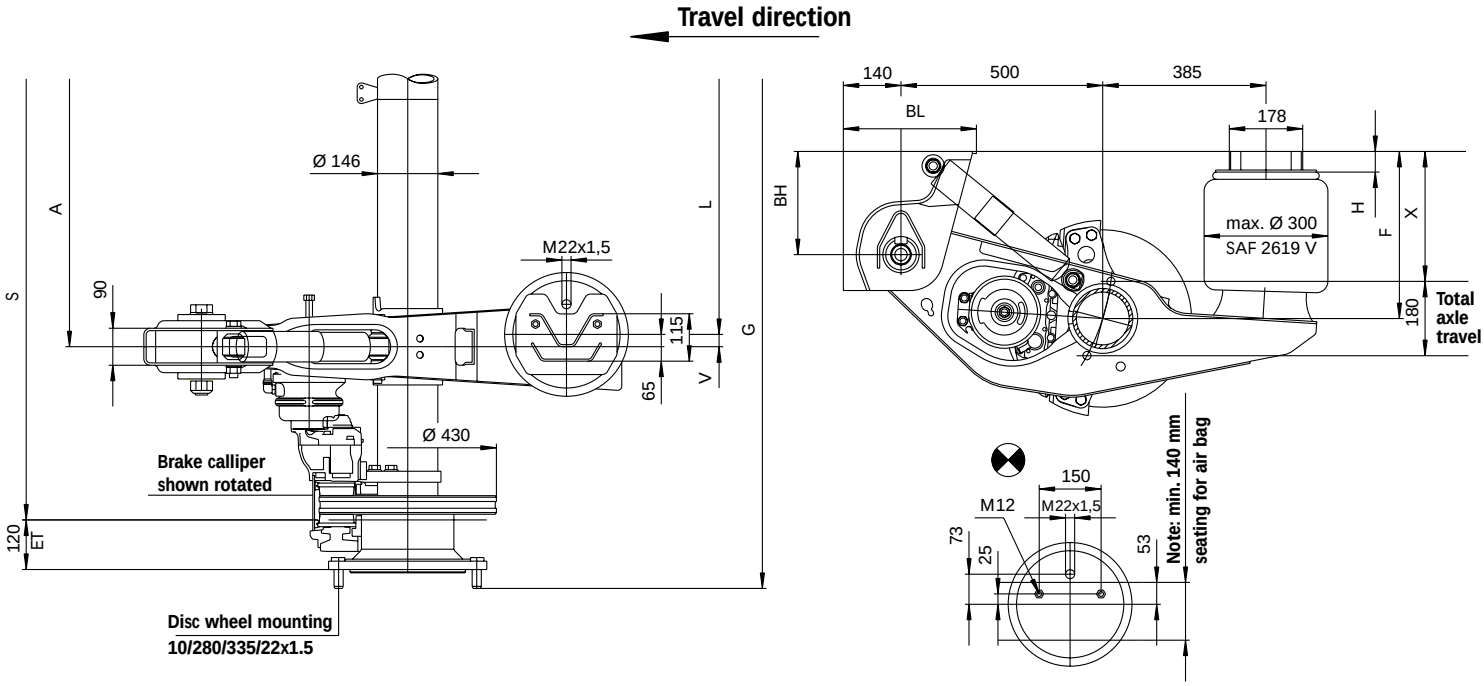

Air suspension type	F Nominal ride height	Ride height range for single axles	for axle assemblies	for axle assemblies with lift	X (overall height) unladen aithout air	laden without air	BH hanger bracket	BL hanger bracket	H air sus-pension bracket	Weight approx.[1]
IO 35/2000 33	355	325-375	335-375	365-375	265	250	200	310	⊗ 0	---
IO 37/2500 33	375	345-395	355-395	385-395	285	270	250	323	⊗ 0	---
IO 40/2505 33	405	375-425	385-425	415-425	315	300	250	323	50	---
IO 42/3005 33	425	395-445	405-445	435-445	335	320	300	337	50	---
IO 45/3010 33	455	425-475	435-475	465-475	365	350	300	337	100	---
IO 47/3510 33	475	445-495	455-495	485-495	385	370	350	350	100	---
IO 50/3515 33	505	475-525	485-525	515-525	415	400	350	350	150	---

Axle type/axle load/brakes Tyres (example)	S / A Track width / bracket centre	G Axle width	V Offset	L Air bag centre	Weight approx.[1]
SK RB 9022	2040/1200	2372	0	1200	
			30	1080	
ET = 120 mm			60	1090	
9000 kg	2040/1300	2372	30	1240	see assembly weight
			60	1180	
SB 2243-11S					
385 / 65 R 22.5	2090/1300	2422	0	1300 [2]	
			30	1240	
			60	1180	

Lengths in mm, weights in kg

1) = without wheel nuts
Weight deviations lie within the permitted DIN tolerances for the respective manufacturing process
2) = Max. possible tyre size 385/65 R 22.5 (distance between tyre and air bag!)

Ref. No.: IO-33-SKRB9022K

Nominal ride height 440 + 490 mm
Air bag SAF 2923 VK

ON ROAD

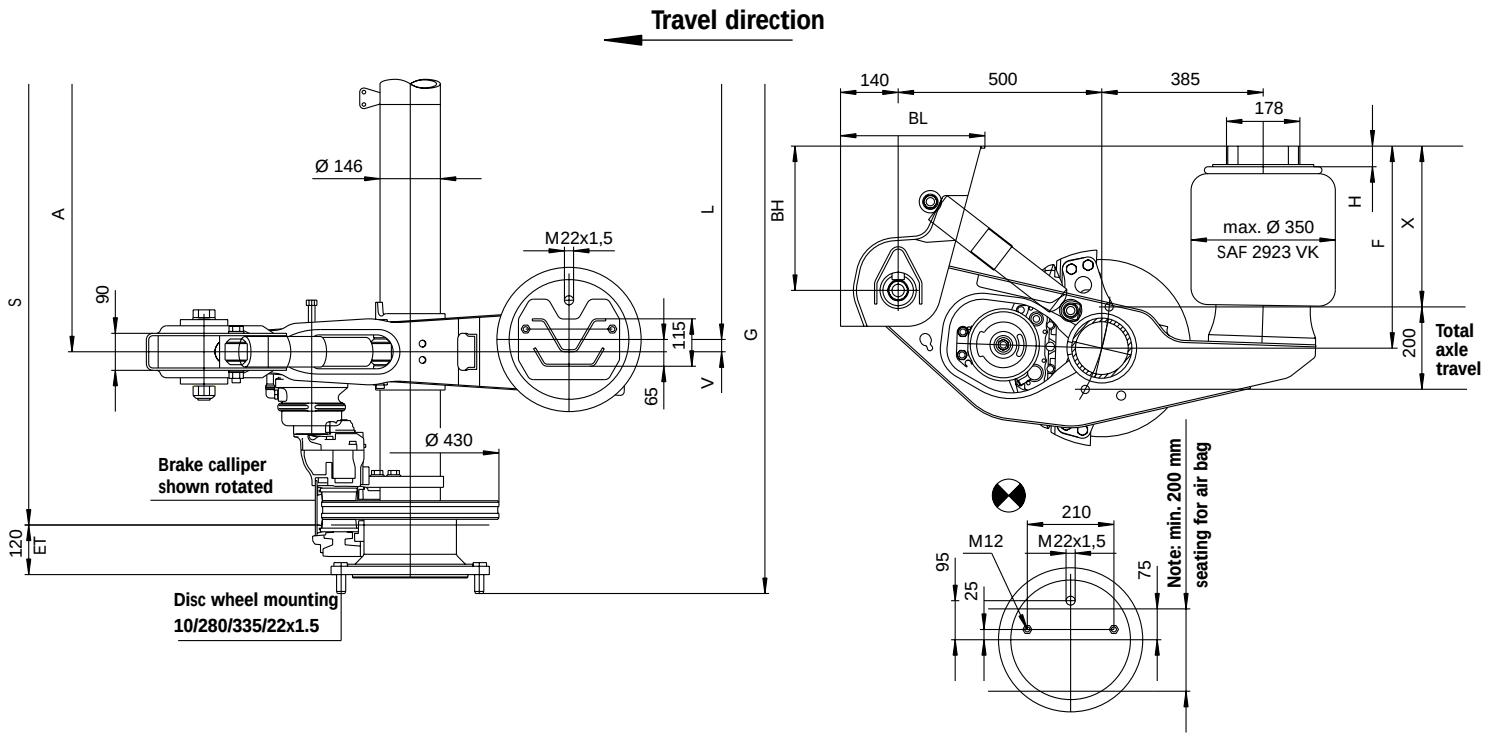

Air suspension type	F Nominal ride height	Ride height range for single axles	for axle assemblies	for axle assemblies with lift	X (overall height) unladen aithout air	laden without air	BH hanger bracket	BL hanger bracket	H air sus-pension bracket	Weight approx.[1]
IO 44/3000 28	440	395-465	405-465	---	335	320	300	337	⊗ 0	---
IO 49/3505 28	490	445-515	455-515	---	385	370	350	350	50	---

Axle type/axle load/brakes Tyres (example)	S / A Track width / bracket centre	G Axle width	V Offset	L Air bag centre	Weight approx.[1]
SK RB 9022	2040/1200	2372	0	1200 [2]	
ET = 120 mm			30	1140	
9000 kg			60	1080	
SB 2243-11S	2040/1300	2372	60	1180	see assembly weight
385/65 R 22.5					
	2090/1300	2422	30	1240	
			60	1180	

Lengths in mm, weights in kg

1) = without wheel nuts
Weight deviations lie within the permitted DIN tolerances for the respective manufacturing process
2) = Max. possible tyre size 385/65 R 22.5 (distance between tyre and air bag!)

Ref. No.: IO-28-SKRB9022K

Air Suspension Series
ON ROAD

Steered trailing axles with disc brakes for 19.5 and 22.5” wheels

Nominal ride height 250 - 350 mm
Air bag SAF 2619 V

ON ROAD

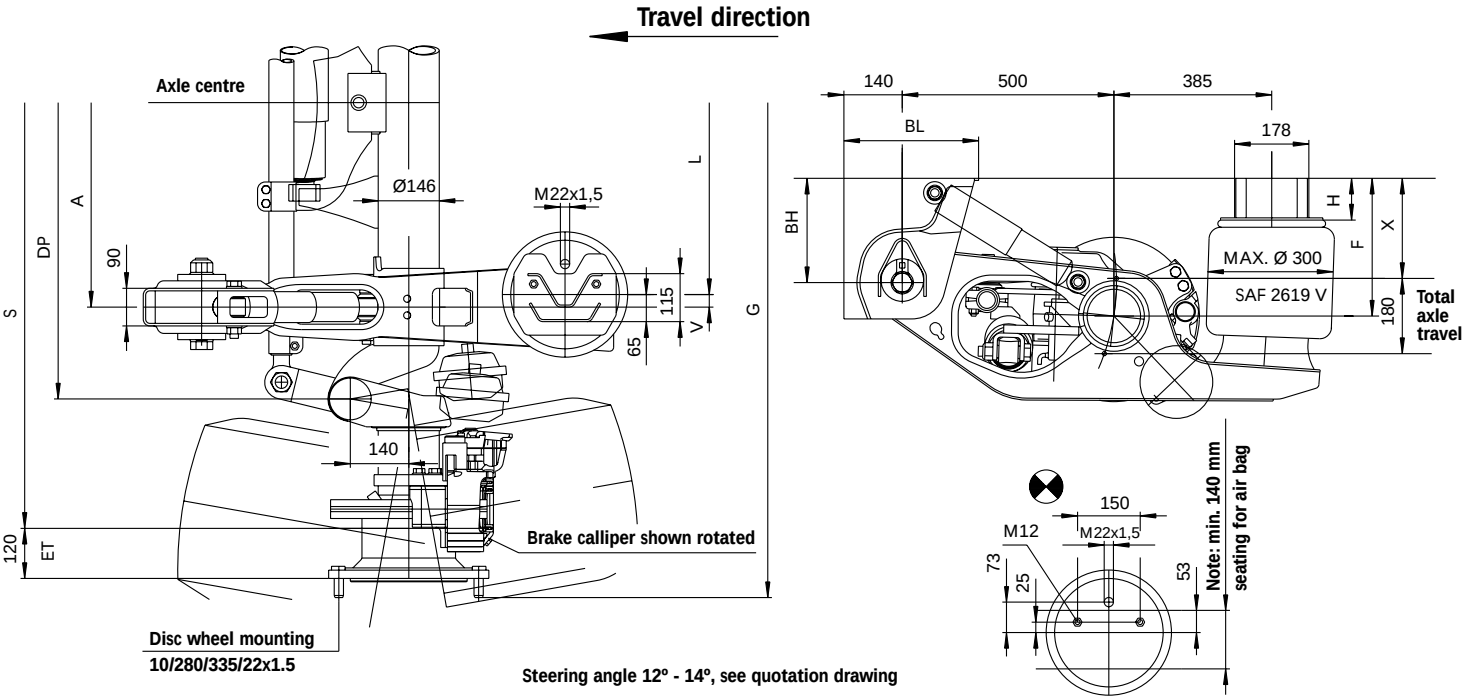

Air suspension type	F Nominal ride height	Ride height range for single axles	for axle assemblies	for axle assemblies with lift	X (overall height) unladen aithout air	laden without air	BH hanger bracket	BL hanger bracket	H air sus-pension bracket	Weight approx.[1]
IU 25/2000 33	250	---	230-270	260-270	160	145	200	310	⊗ 0	606
IU 28/2005 33	280	---	260-300	290-300	190	175	200	310	50	611
IU 30/2505 33	300	---	280-320	310-320	210	195	250	323	50	616
IU 33/2510 33	330	---	310-350	340-350	240	225	250	323	100	618
IU 35/3010 33	350	---	330-370	360-370	260	245	300	337	100	621

Axle type/axle load/brakes Tyres (example)	S / A Track width / bracket centre	G Axle width	DP Pivot point centre	Tyres 385/65 R 22.5 V Offset	L Air bag centre	425/55 R 19.5 V Offset	L Air bag centre	Weight approx.[1]
SK RLB 9019	2040/980	2372	1420	0	980	0	980	see assembly weight
ET = 120 mm				30	920	30	920	
9000 kg				60	860	60	860	
SB 1937-11S	2090/980	2422	1470	0	980	0	980	
385/65 R 22.5				30	920	30	920	
425/55 R 19.5				60	860	60	860	
	2090/1300	2422	1470	0	1030	0	1030	
				30	970	30	970	
				60	910	60	910	
	2140/1080	2472	1520	0	1080	0	1080	
				30	1020	30	1020	
				60	960	60	960	

Lengths in mm, weights in kg

1) = without wheel nuts
Weight deviations lie within the permitted DIN tolerances for the respective manufacturing process

Ref. No.: IU-33-SKRLB9019

Nominal ride height 290 - 420 mm
Air bag SAF 2923 VK

ON ROAD

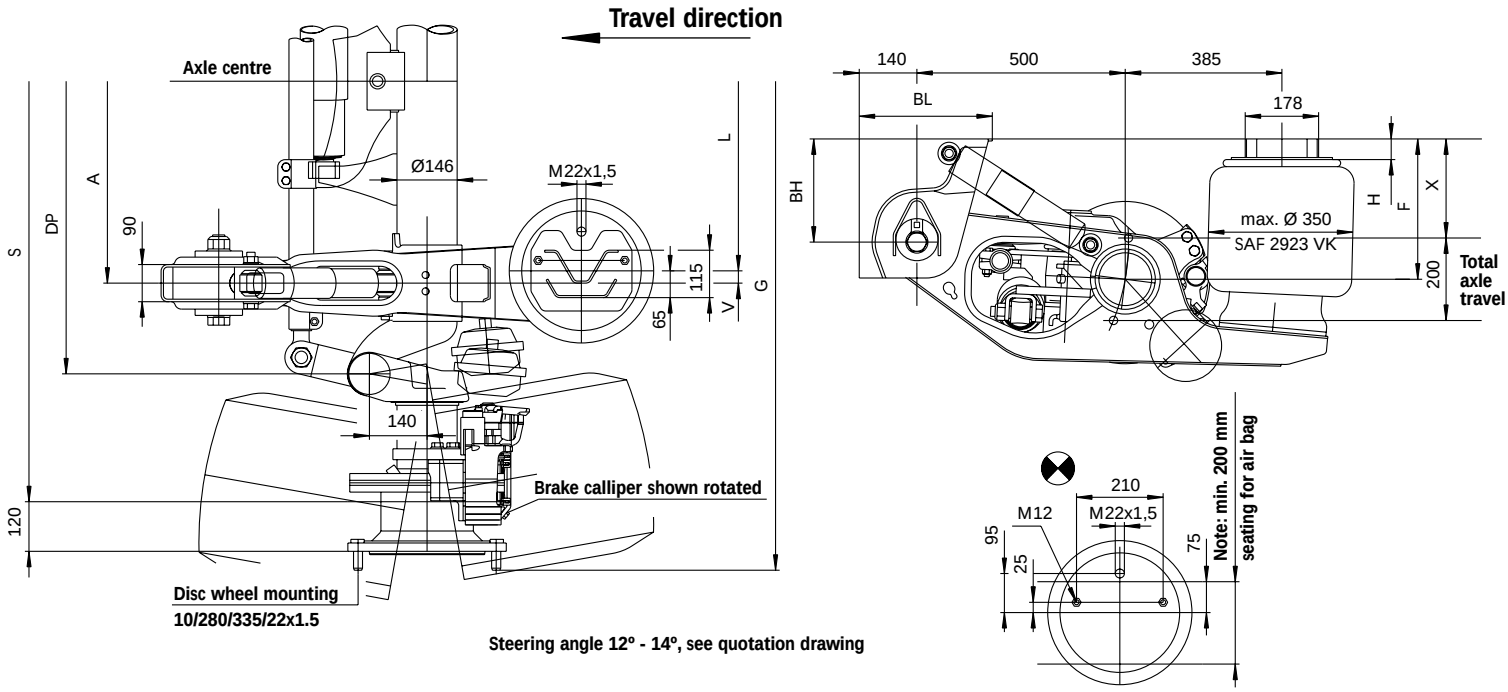

Air suspension type	F Nominal ride height	Ride height range for single axles	Ride height range for axle assemblies	Ride height range for axle assemblies with lift	X (overall height) unladen aithout air	X (overall height) laden without air	BH hanger bracket	BL hanger bracket	H air sus-pension bracket	Weight approx.[1]
IU 29/2000 28	290	---	260-320	290-320	190	175	200	310	⊗ 0	614
IU 31/2500 28	310	---	280-340	310-340	210	195	250	323	⊗ 0	617
IU 34/2505 28	340	---	310-370	340-370	240	225	250	323	50	623
IU 36/3005 28	360	---	330-390	360-390	260	245	300	337	50	626
IU 39/3010 28	390	---	360-420	390-420	290	275	300	337	100	628
IU 42/3015 28	420	---	390-450	390-450	320	305	300	337	150	633

Axle type/axle load/brakes Tyres (example)	S / A Track width/ bracket centre	G Axle width	DP Pivot point centre	Tyres 385/65 R 22.5 V Offset	Tyres 385/65 R 22.5 L Air bag centre	Tyres 425/55 R 19.5 V Offset	Tyres 425/55 R 19.5 L Air bag centre	Weight approx.[1]
SK RLB 9019	2040/980	2372	1420	0	980	0	980	see assembly weight
ET = 120 mm				30	920	30	920	
9000 kg				60	860	60	860	
SB 1937-11S	2090/980	2422	1470	0	980	0	980	
385/65 R 22.5				30	920	30	920	
425/55 R 19.5				60	860	60	860	
	2090/1300	2422	1470	0	1030	0	1030	
				30	970	30	970	
				60	910	60	910	
	2140/1080	2472	1520	0	1080	0	1080	
				30	1020	30	1020	
				60	960	60	960	

Lengths in mm, weights in kg

1) = without wheel nuts
Weight deviations lie within the permitted DIN tolerances for the respective manufacturing process

Ref. No.: IU-28-SKRLB9019

Nominal ride height 355 - 505 mm
Air bag SAF 2619 V

ON ROAD

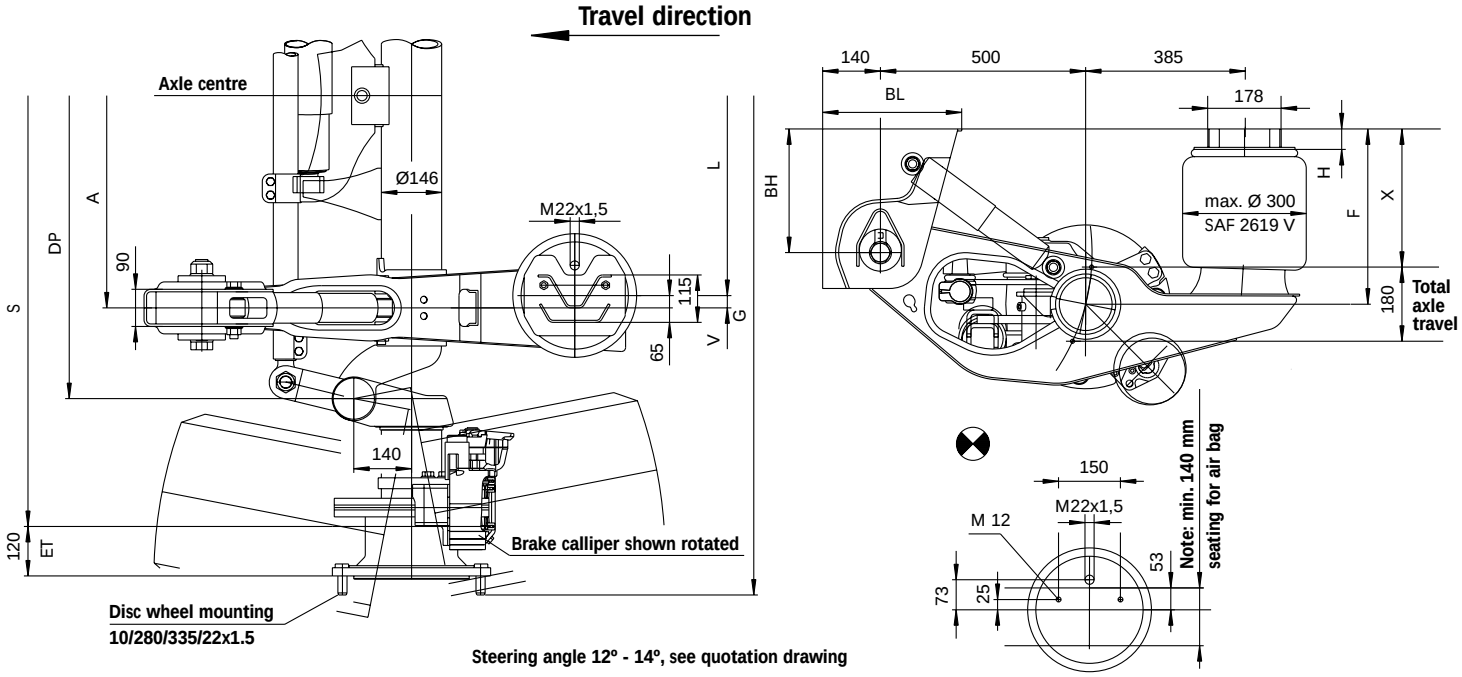

Air suspension type	F Nominal ride height	Ride height range for single axles	for axle assemblies	for axle assemblies with lift	X (overall height) unladen aithout air	laden without air	BH hanger bracket	BL hanger bracket	H air sus-pension bracket	Weight approx.[1]
IO 35/2000 33	355	---	335-375	365-375	265	250	200	310	⊗ 0	606
IO 37/2500 33	375	---	355-395	385-395	285	270	250	323	⊗ 0	610
IO 40/2505 33	405	---	385-425	415-425	315	300	250	323	50	615
IO 42/3005 33	425	---	405-445	435-445	335	320	300	337	50	618
IO 45/3010 33	455	---	435-475	465-475	365	350	300	337	100	620
IO 47/3510 33	475	---	455-495	485-495	385	370	350	350	100	623
IO 50/3515 33	505	---	485-525	515-525	415	400	350	350	150	625

Axle type/axle load/brakes Tyres (example)	S / A Track width / bracket centre	G Axle width	DP Pivot point centre	Tyres 385/65 R 22.5 V Offset	L Air bag centre	425/55 R 19.5 V Offset	L Air bag centre	Weight approx.[1]
SK RLB 9019	2040/980	2372	1420	0	980	0	980	see assembly weight
ET = 120 mm				30	920	30	920	
9000 kg				60	860	60	860	
SB 1937-11S	2090/980	2422	1470	0	980	0	980	
385/65 R 22.5				30	920	30	920	
425/55 R 19.5				60	860	60	860	
	2090/1030	2422	1470	0	1030	0	1030	
				30	970	30	970	
				60	910	60	910	
	2140/1080	2472	1520	0	1080	0	1080	
				30	1020	30	1020	
				60	960	60	960	

Lengths in mm, weights in kg

1) = without wheel nuts
Weight deviations lie within the permitted DIN tolerances for the respective manufacturing process

Ref. No.: IO-33-SKRLB9019

Nominal ride height 440 + 490 mm
Air bag SAF 2923 VK

ON ROAD

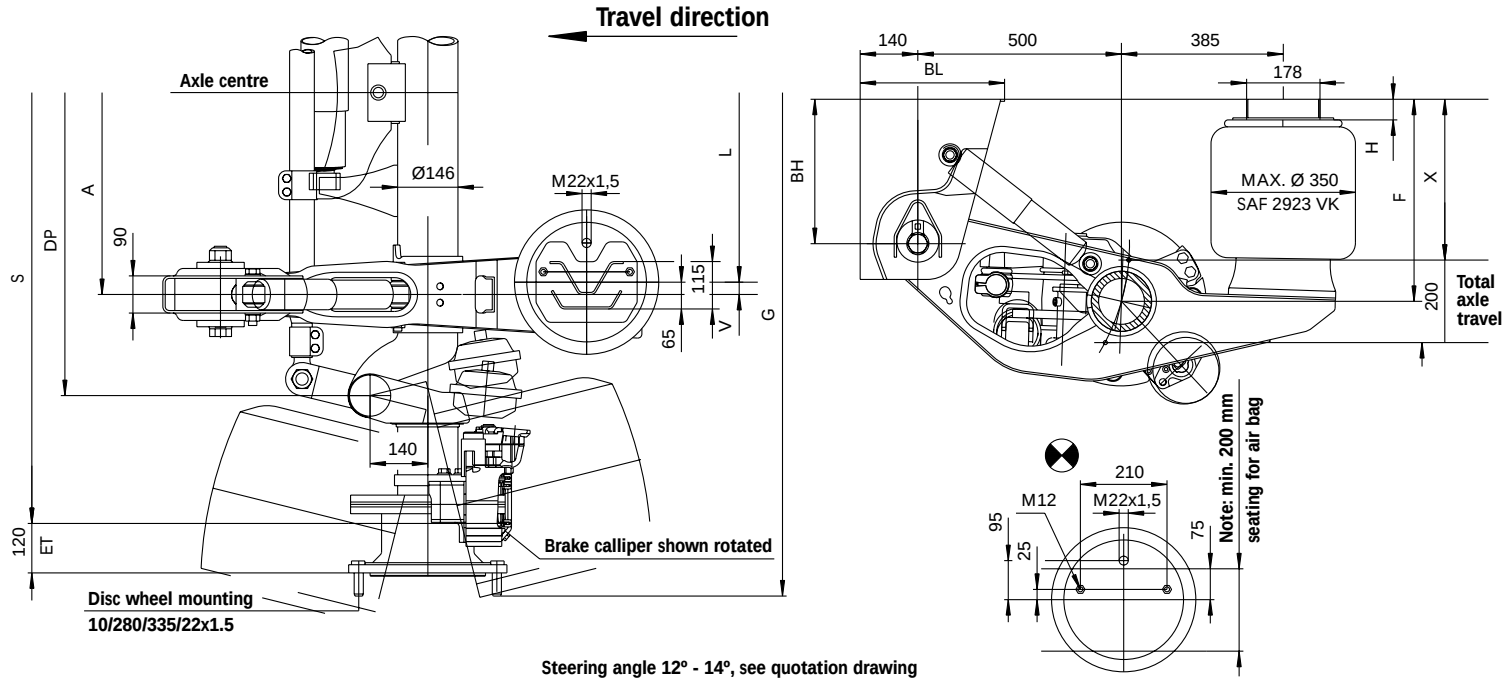

Air suspension type	F Nominal ride height	Ride height range for single axles	for axle assemblies	for axle assemblies with lift	X (overall height) unladen aithout air	laden without air	BH hanger bracket	BL hanger bracket	H air sus-pension bracket	Weight approx.[1]
IO 44/3000 28	440	---	405-465	---	335	320	300	337	⊗ 0	620
IO 49/3505 28	490	---	455-515	---	385	370	350	350	50	628

Axle type/axle load/brakes Tyres (example)	S / A Track width / bracket centre	G Axle width	DP Pivot point centre	Tyres 385/65 R 22.5 V Offset	L Air bag centre	425/55 R 19.5 V Offset	L Air bag centre	Weight approx.[1]
SK RLB 9019	2040/980	2372	1420	0	980	0	980	see assembly weight
ET = 120 mm				30	920	30	920	
9000 kg				60	860	60	860	
SB 1937-11S	2090/980	2422	1470	0	980	0	980	
385/65 R 22.5				30	920	30	920	
425/55 R 19.5				60	860	60	860	
	2090/1030	2422	1470	0	1030	0	1030	
				30	970	30	970	
				60	910	60	910	
	2140/1080	2472	1520	0	1080	0	1080	
				30	1020	30	1020	
				60	960	60	960	

Lengths in mm, weights in kg

1) = without wheel nuts
Weight deviations lie within the permitted DIN tolerances for the respective manufacturing process

Ref. No.: IO-28-SKRLB9019

Nominal ride height 250 - 350 mm
Air bag SAF 2619 V

ON ROAD

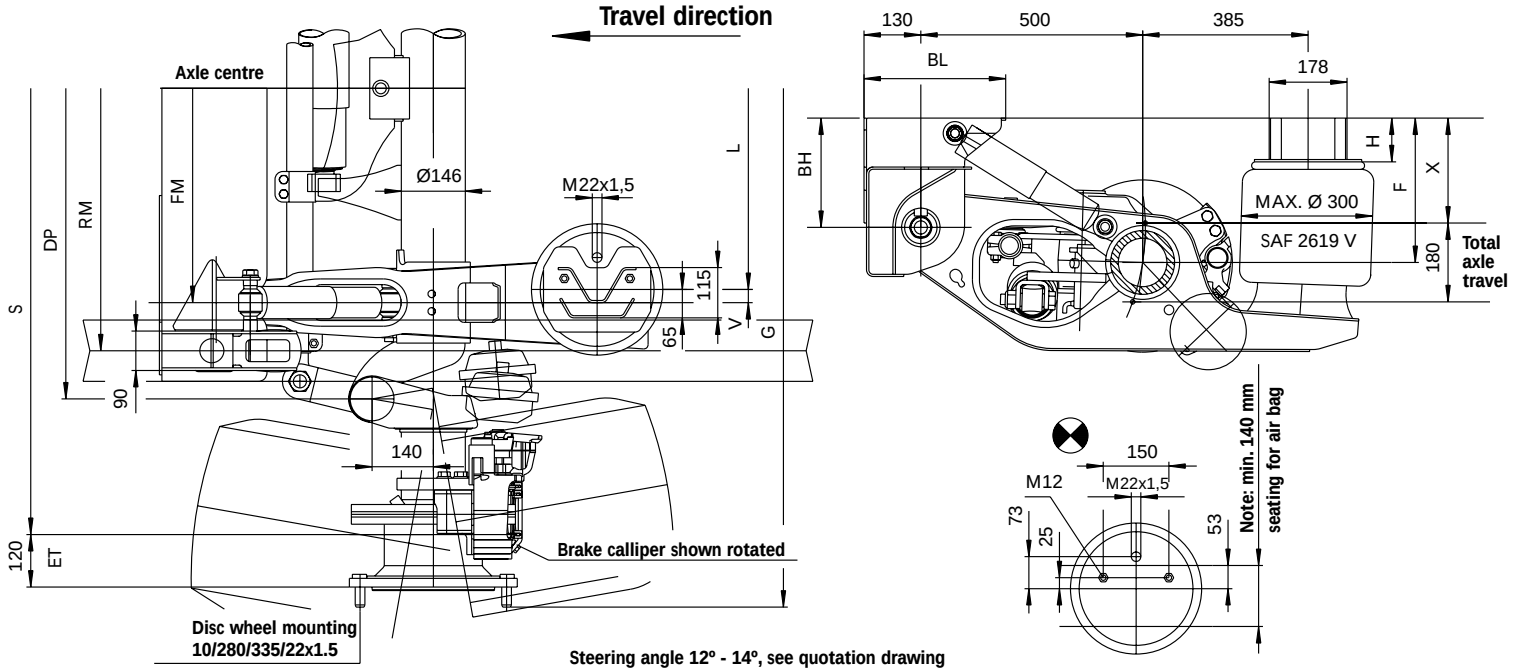

Air suspension type	F Nominal ride height	Ride height range for single axles	for axle assemblies	for axle assemblies with lift	X (overall height) unladen aithout air	laden without air	BH cross-member	BL cross-member	H air sus-pension bracket	Weight approx.[1]
IU 25/2000 33 Q	250	---	230-270	260-270	160	145	200	324	⊗ 0	---
IU 28/2005 33 Q	280	---	260-300	290-300	190	175	200	324	50	---
IU 30/2505 33 Q	300	---	280-320	310-320	210	195	250	324	50	---
IU 33/2510 33 Q	330	---	310-350	340-350	240	225	250	324	100	---
IU 35/3010 33 Q	350	---	330-370	360-370	260	245	300	335	100	---

Axle type/axle load/brakes Tyres (example)	S / FM / RM Track width / spring centre frame centre	G Axle width	DP Pivot point centre	Tyres 385/65 R 22.5 V Offset	L Air bag centre	425/55 R 19.5 V Offset	L Air bag centre	Weight approx.[1]
SK RLB 9019	2040/980/1200	2372	1420	0	980	0	980	see assembly weight
ET = 120 mm				30	920	30	920	
9000 kg				60	860	60	860	
SB 1937-11S	2040/980/1300	2372	1420	0	980	0	980	
385/65 R 22.5				30	920	30	920	
425/55 R 19.5				60	860	60	860	
	2140/1080/1300	2472	1520	0	1080	0	1080	
				30	1020	30	1020	
				60	960	60	960	
	2140/1080/1400	2472	1520	0	1080	0	1080	
				30	1020	30	1020	
				60	960	60	960	

Lengths in mm, weights in kg

1) = without wheel nuts
Weight deviations lie within the permitted DIN tolerances for the respective manufacturing process

Ref. No.: IU-33-SKRLB9019-Q

Nominal ride height 290 - 420 mm
Air bag SAF 2923 VK

ON ROAD

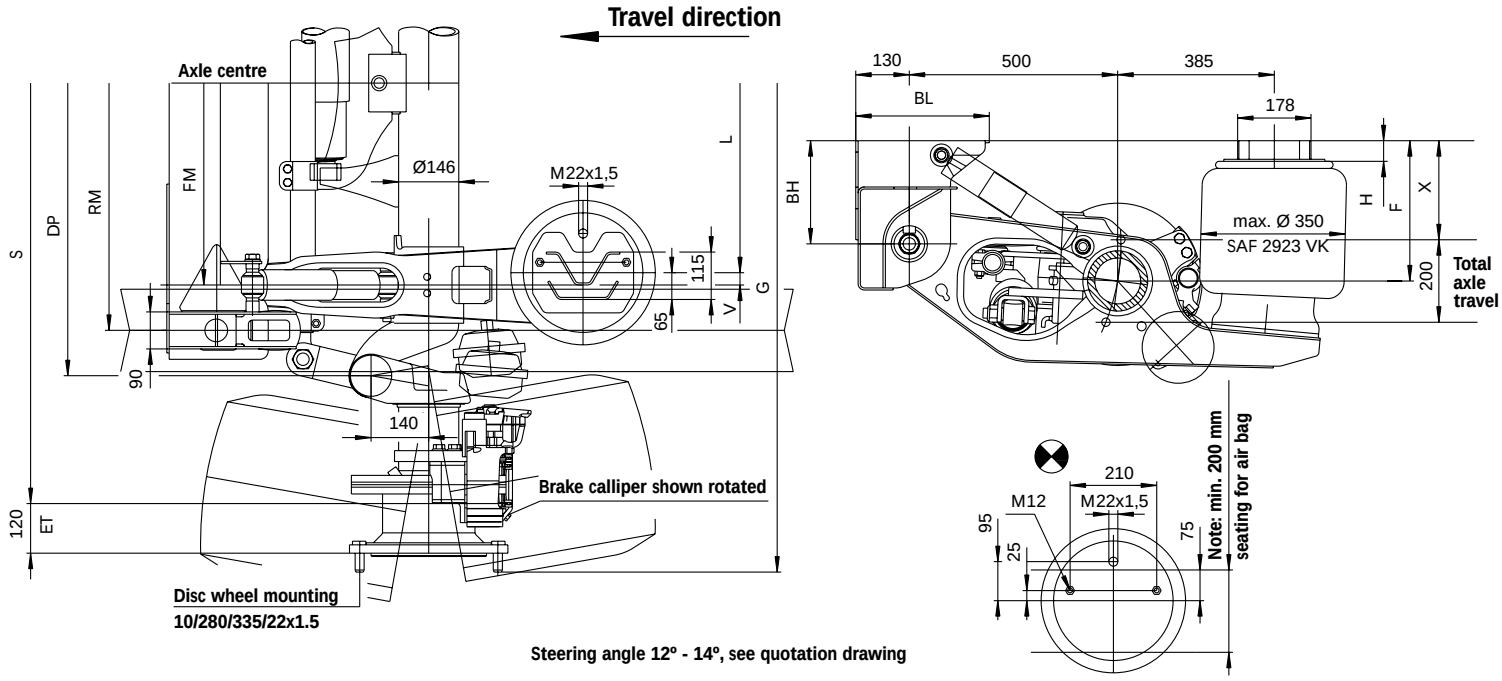

Steering angle 12° - 14°, see quotation drawing

Air suspension type	F Nominal ride height	Ride height range for single axles	for axle assemblies	for axle assemblies with lift	X (overall height) unladen aithout air	laden without air	BH cross-member	BL cross-member	H air sus-pension bracket	Weight approx.[1]
IU 29/2000 28 Q	290	---	260-320	290-320	190	175	200	324	⊗ 0	---
IU 31/2500 28 Q	310	---	280-340	310-340	210	195	250	324	⊗ 0	---
IU 34/2505 28 Q	340	---	310-370	340-370	240	225	250	324	50	---
IU 36/3005 28 Q	360	---	330-390	360-390	260	245	300	335	50	---
IU 39/3010 28 Q	390	---	360-420	390-420	290	275	300	335	100	---
IU 42/3015 28 Q	420	---	390-450	390-450	320	305	300	335	150	---

Axle type/axle load/brakes Tyres (example)	S / FM / RM Track width / spring centre frame centre	G Axle width	DP Pivot point centre	Tyres 385/65 R 22.5 V Offset	L Air bag centre	425/55 R 19.5 V Offset	L Air bag centre	Weight approx.[1]
SK RLB 9019	2040/980/1200	2372	1420	0	980	0	980	see assembly weight
ET = 120 mm				30	920	30	920	
9000 kg				60	860	60	860	
SB 1937-11S	2040/980/1300	2372	1420	0	980	0	980	
385/65 R 22.5				30	920	30	920	
425/55 R 19.5				60	860	60	860	
	2140/1080/1300	2472	1520	0	1080	0	1080	
				30	1020	30	1020	
				60	960	60	960	
	2140/1080/1400	2472	1520	0	1080	0	1080	
				30	1020	30	1020	
				60	960	60	960	

Lengths in mm, weights in kg

1) = without wheel nuts
Weight deviations lie within the permitted DIN tolerances for the respective manufacturing process

Ref. No.: IU-28-SKRLB9019-Q

Nominal ride height 355 - 455 mm
Air bag SAF 2619 V

ON ROAD

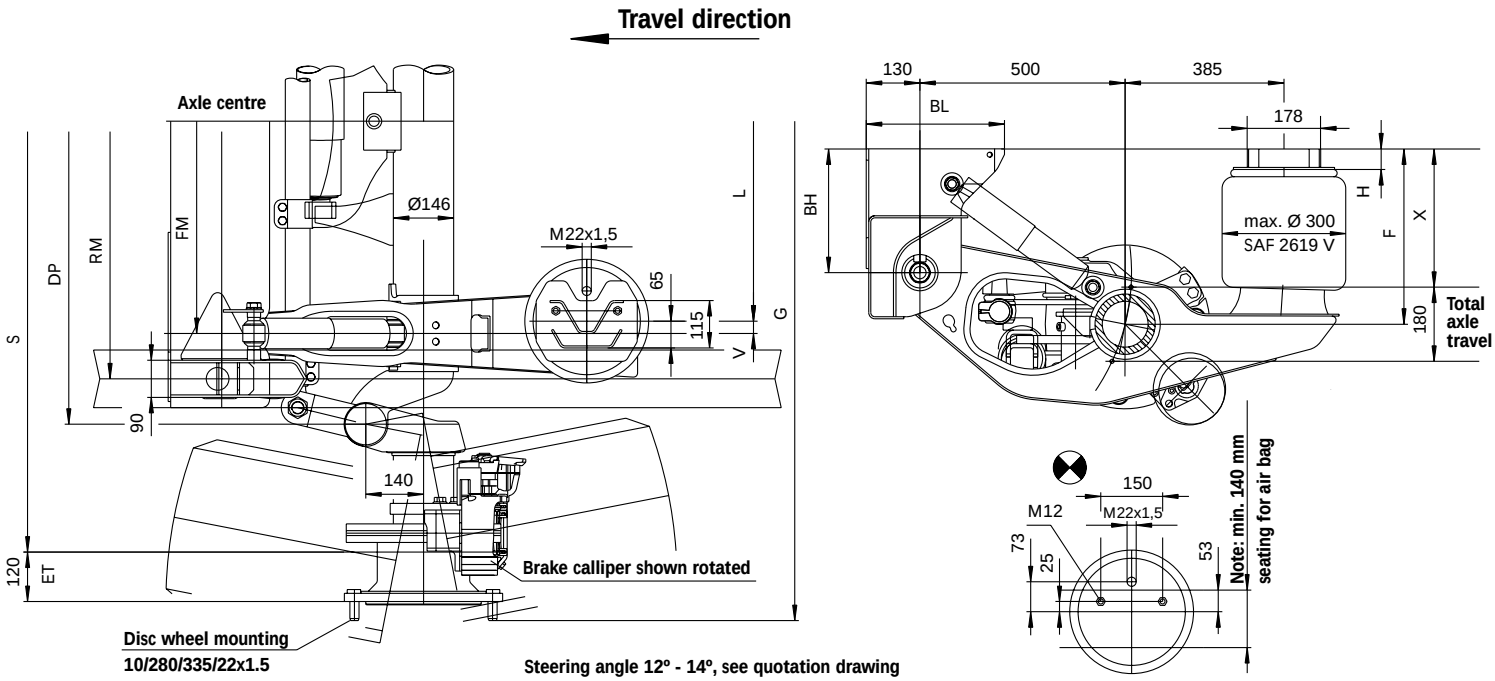

Air suspension type	F Nominal ride height	Ride height range for single axles	for axle assemblies	for axle assemblies with lift	X (overall height) unladen aithout air	laden without air	BH cross-member	BL cross-member	H air sus-pension bracket	Weight approx.[1]
IO 35/2000 33 Q	355	---	335-375	365-375	265	250	200	324	⊗ 0	---
IO 37/2500 33 Q	375	---	355-395	385-395	285	270	250	324	⊗ 0	---
IO 40/2505 33 Q	405	---	385-425	415-425	315	300	250	324	50	---
IO 42/3005 33 Q	425	---	405-445	435-445	335	320	300	335	50	---
IO 45/3010 33 Q	455	---	435-475	465-475	365	350	300	335	100	---

Axle type/axle load/brakes Tyres (example)	S / FM / RM Track width / spring centre frame centre	G Axle width	DP Pivot point centre	Tyres 385/65 R 22.5 V Offset	L Air bag centre	425/55 R 19.5 V Offset	L Air bag centre	Weight approx.[1]
SK RLB 9019 **ET = 120 mm** **9000 kg** **SB 1937-11S** **385/65 R 22.5** **425/55 R 19.5**	2040/980/1200	2372	1420	0	980	0	980	siehe Aggregat-gewicht
				30	920	30	920	
				60	860	60	860	
	2040/980/1300	2372	1420	0	980	0	980	
				30	920	30	920	
				60	860	60	860	
	2140/1080/1300	2472	1520	0	1080	0	1080	
				30	1020	30	1020	
				60	960	60	960	
	2140/1080/1400	2472	1520	0	1080	0	1080	
				30	1020	30	1020	
				60	960	60	960	

Lengths in mm, weights in kg

1) = without wheel nuts
Weight deviations lie within the permitted DIN tolerances for the respective manufacturing process

Ref. No.: IO-33-SKRLB9019-Q

Nominal ride height 440 mm
Air bag SAF 2923 VK

ON ROAD

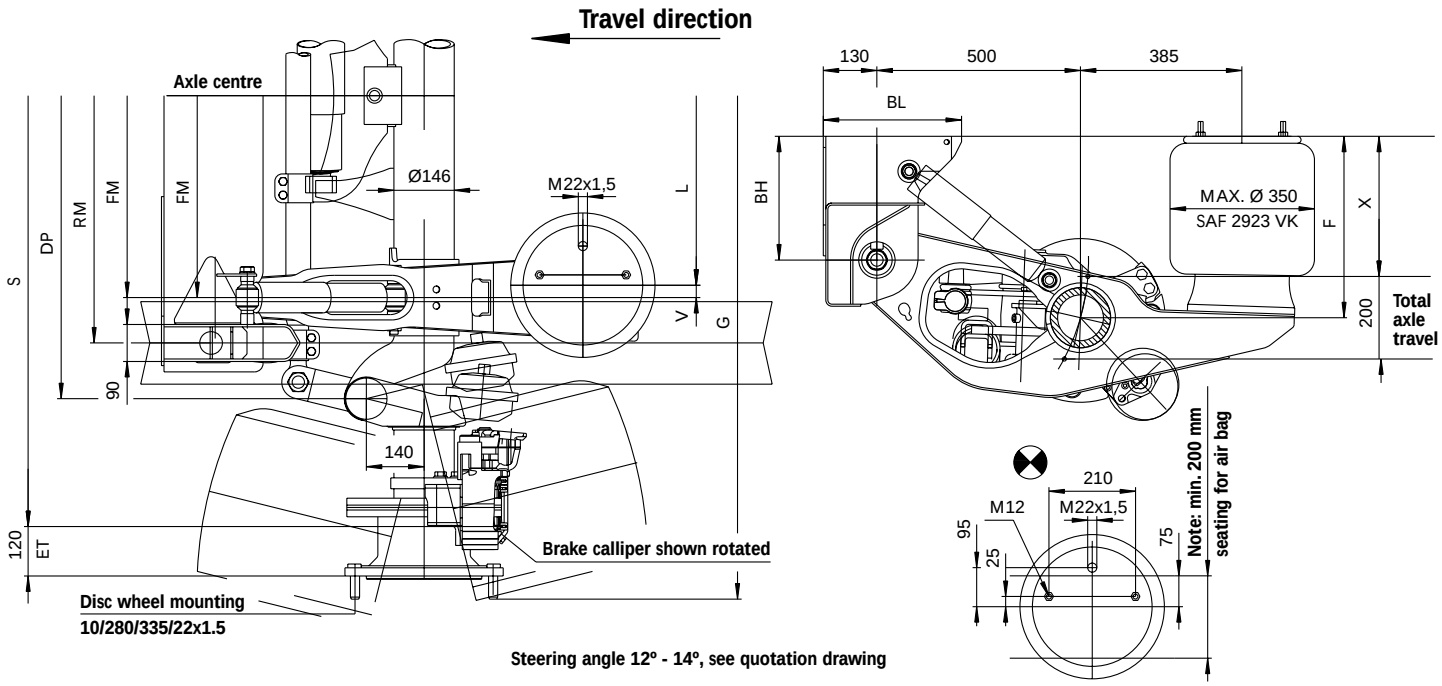

Air suspension type	F Nominal ride height	Ride height range for single axles	for axle assemblies	for axle assemblies with lift	X (overall height) unladen aithout air	laden without air	BH cross-member	BL cross-member	H air sus-pension bracket	Weight approx.[1]
IO 44/3000 28 Q	440	---	405-465	---	335	320	300	335	⊗ 0	---

Axle type/axle load/brakes Tyres (example)	S / FM / RM Track width / spring centre frame centre	G Axle width	DP Pivot point centre	Tyres 385/65 R 22.5 V Offset	L Air bag centre	425/55 R 19.5 V Offset	L Air bag centre	Weight approx.[1]
SK RLB 9019	2040/980/1200	2372	1420	0	980	0	980	see assembly weight
ET = 120 mm				30	920	30	920	
9000 kg				60	860	60	860	
SB 1937-11S	2040/980/1300	2372	1420	0	980	0	980	
385/65 R 22.5				30	920	30	920	
425/55 R 19.5				60	860	60	860	
	2140/1080/1300	2472	1520	0	1080	0	1080	
				30	1020	30	1020	
				60	960	60	960	
	2140/1080/1400	2472	1520	0	1080	0	1080	
				30	1020	30	1020	
				60	960	60	960	

Lengths in mm, weights in kg

1) = without wheel nuts
Weight deviations lie within the permitted DIN tolerances for the respective manufacturing process

Ref. No.: IO-28-SKRLB9019-Q

Air Suspension Series
ON ROAD

Steered trailing axles with disc brakes for 22.5” wheels

Nominal ride height 250 - 350 mm
Air bag SAF 2619 V

ON ROAD

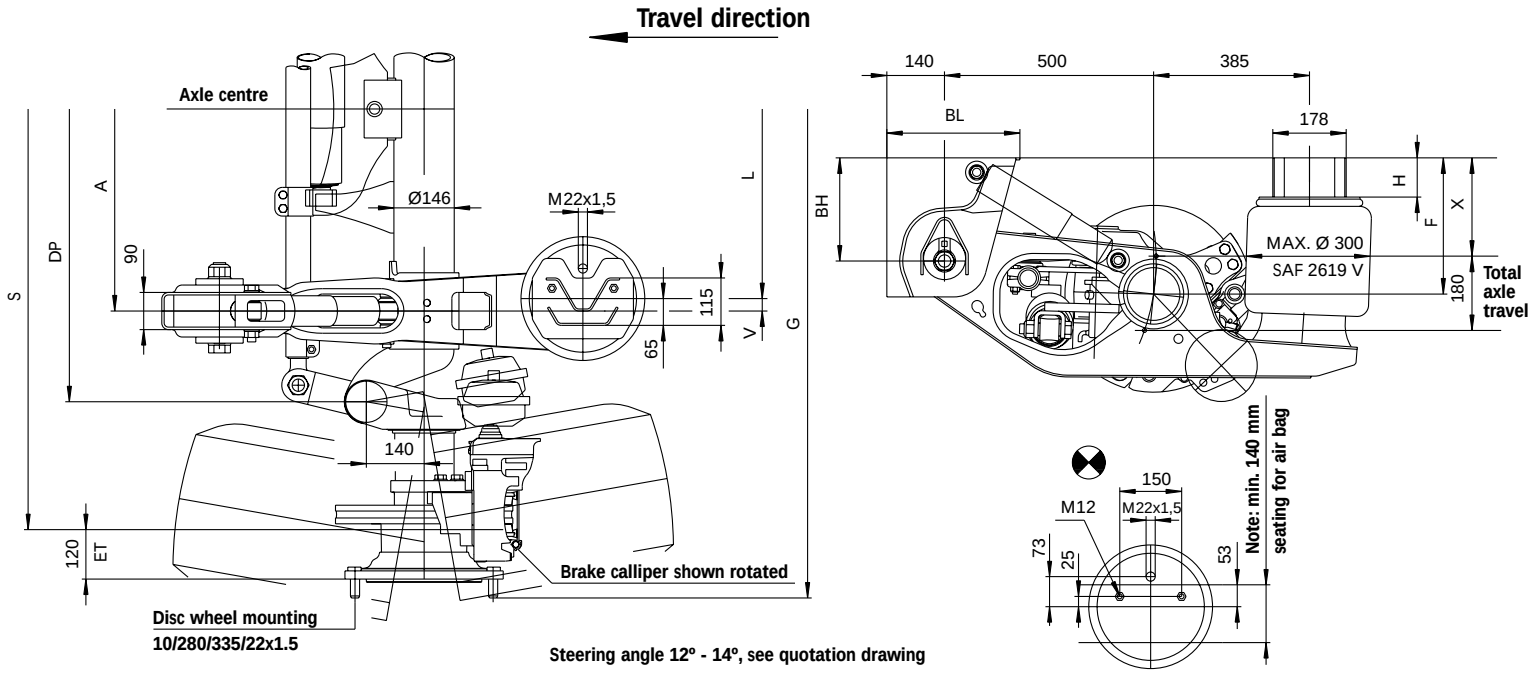

Air suspension type	F Nominal ride height	Ride height range for single axles	for axle assemblies	for axle assemblies with lift	X (overall height) unladen aithout air	laden without air	BH hanger bracket	BL hanger bracket	H air sus-pension bracket	Weight approx.[1]
IU 25/2000 33	250	---	230-270	260-270	160	145	200	310	⊗ 0	651
IU 28/2005 33	280	---	260-300	290-300	190	175	200	310	50	656
IU 30/2505 33	300	---	280-320	310-320	210	195	250	323	50	661
IU 33/2510 33	330	---	310-350	340-350	240	225	250	323	100	663
IU 35/3010 33	350	---	330-370	360-370	260	245	300	337	100	666

Axle type/axle load/brakes Tyres (example)	S / FM / RM Track width / spring centre frame centre	G Axle width	DP Pivot point centre	Tyres 385/65 R 22.5 V Offset	L Air bag centre	Weight approx.[1]
SK RLB 9022 ET = 120 mm 9000 kg SB 2243-11S 385/65 R 22.5	2040/980	2372	1420	0	980	see assembly weight
				30	920	
				60	860	
	2090/980	2422	1470	0	980	
				30	920	
				60	860	
	2090/1030	2422	1470	0	1030	
				30	970	
				60	910	
	2140/1080	2472	1520	0	1080	
				30	1020	
				60	960	

Lengths in mm, weights in kg

1) = without wheel nuts
Weight deviations lie within the permitted DIN tolerances for the respective manufacturing process

Ref. No.: IU-33-SKRLB9022

Nominal ride height 290 - 420 mm
Air bag SAF 2923 VK

ON ROAD

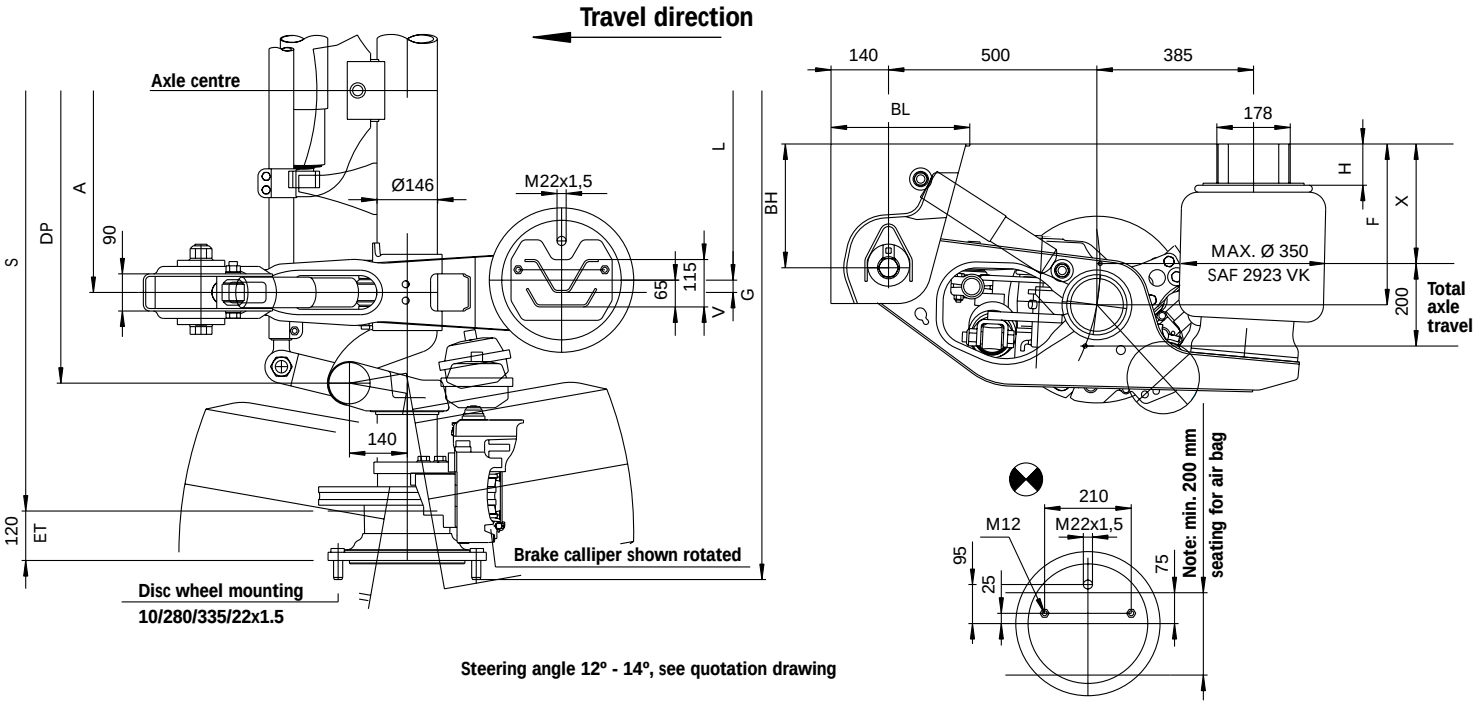

Steering angle 12° - 14°, see quotation drawing

Air suspension type	F Nominal ride height	Ride height range for single axles	for axle assemblies	for axle assemblies with lift	X (overall height) unladen aithout air	laden without air	BH hanger bracket	BL hanger bracket	H air sus-pension bracket	Weight approx.[1]
IU 29/2000 28	290	---	260-320	290-320	190	175	200	310	⊗ 0	659
IU 31/2500 28	310	---	280-340	310-340	210	195	250	323	⊗ 0	662
IU 34/2505 28	340	---	310-370	340-370	240	225	250	323	50	667
IU 36/3005 28	360	---	330-390	360-390	260	245	300	337	50	671
IU 39/3010 28	390	---	360-420	390-420	290	275	300	337	100	673
IU 42/3015 28	420	---	390-450	390-450	320	305	300	337	150	678

Axle type/axle load/brakes Tyres (example)	S / FM / RM Track width / spring centre frame centre	G Axle width	DP Pivot point centre	Tyres 385/65 R 22.5 V Offset	L Air bag centre	Weight approx.[1]
SK RLB 9022 ET = 120 mm 9000 kg SB 2243-11S 385/65 R 22.5	2040/980	2372	1420	0	980	see assembly weight
				30	920	
				60	860	
	2090/980	2422	1470	0	980	
				30	920	
				60	860	
	2090/1030	2422	1470	0	1030	
				30	970	
				60	910	
	2140/1080	2472	1520	0	1080	
				30	1020	
				60	960	

Lengths in mm, weights in kg

1) = without wheel nuts
Weight deviations lie within the permitted DIN tolerances for the respective manufacturing process

Ref. No.: IU-28-SKRLB9022

Nominal ride height 355 - 505 mm
Air bag SAF 2619 V

ON ROAD

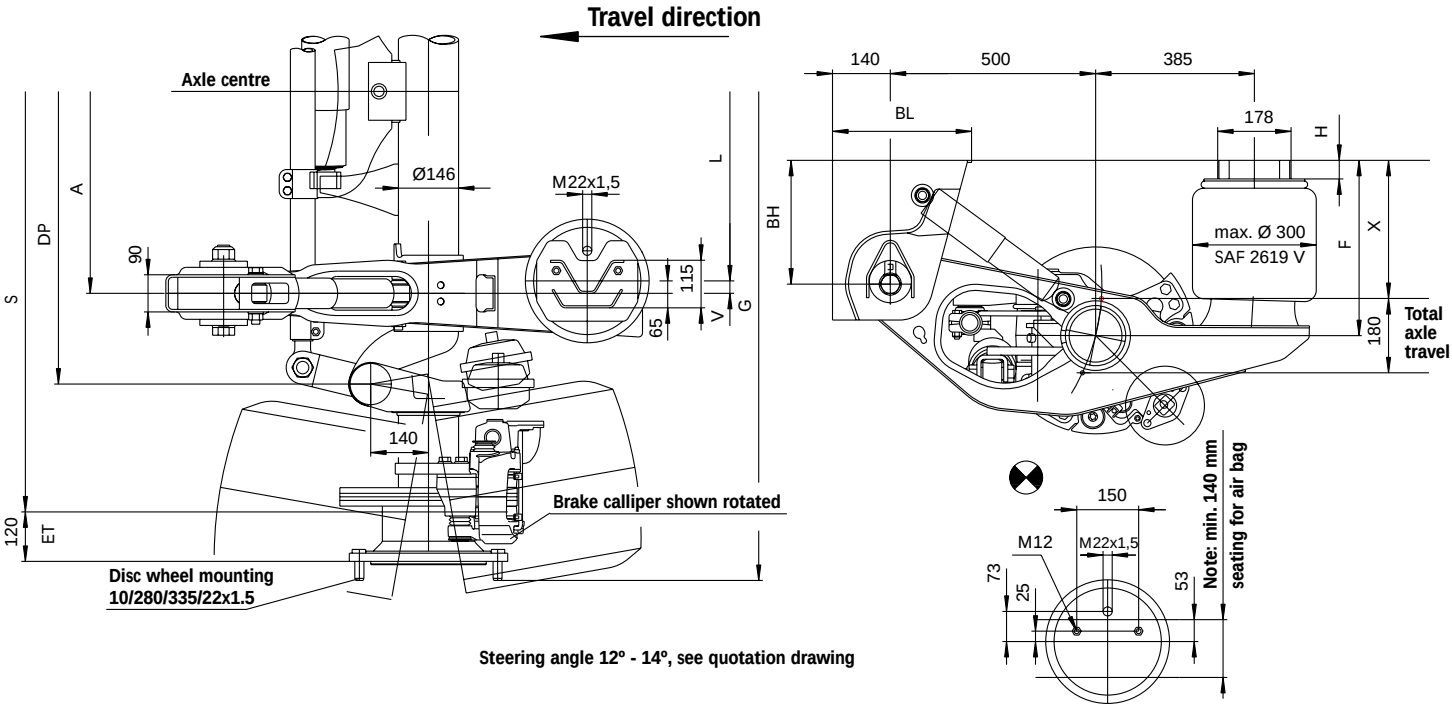

Steering angle 12° - 14°, see quotation drawing

Air suspension type	F Nominal ride height	Ride height range for single axles	for axle assemblies	for axle assemblies with lift	X (overall height) unladen aithout air	laden without air	BH hanger bracket	BL hanger bracket	H air sus-pension bracket	Weight approx.[1]
IO 35/2000 33	355	---	335-375	365-375	265	250	200	310	⊗ 0	651
IO 37/2500 33	375	---	355-395	385-395	285	270	250	323	⊗ 0	655
IO 40/2505 33	405	---	385-425	415-425	315	300	250	323	50	660
IO 42/3005 33	425	---	405-445	435-445	335	320	300	337	50	662
IO 45/3010 33	455	---	435-475	465-475	365	350	300	337	100	664
IO 47/3510 33	475	---	455-495	485-495	385	370	350	350	100	667
IO 50/3515 33	505	---	485-525	515-525	415	400	350	350	150	669

Axle type/axle load/brakes Tyres (example)	S / FM / RM Track width / spring centre frame centre	G Axle width	DP Pivot point centre	Tyres 385/65 R 22.5 V Offset	L Air bag centre	Weight approx.[1]
SK RLB 9022 ET = 120 mm 9000 kg SB 2243-11S 385/65 R 22.5	2040/980	2372	1420	0	980	see assembly weight
				30	920	
				60	860	
	2090/980	2422	1470	0	980	
				30	920	
				60	860	
	2090/1030	2422	1470	0	1030	
				30	970	
				60	910	
	2140/1080	2472	1520	0	1080	
				30	1020	
				60	960	

Lengths in mm, weights in kg

1) = without wheel nuts
Weight deviations lie within the permitted DIN tolerances for the respective manufacturing process

Ref. No.: IO-33-SKRLB9022

Nominal ride height 440 + 490 mm
Air bag SAF 2923 VK

ON ROAD

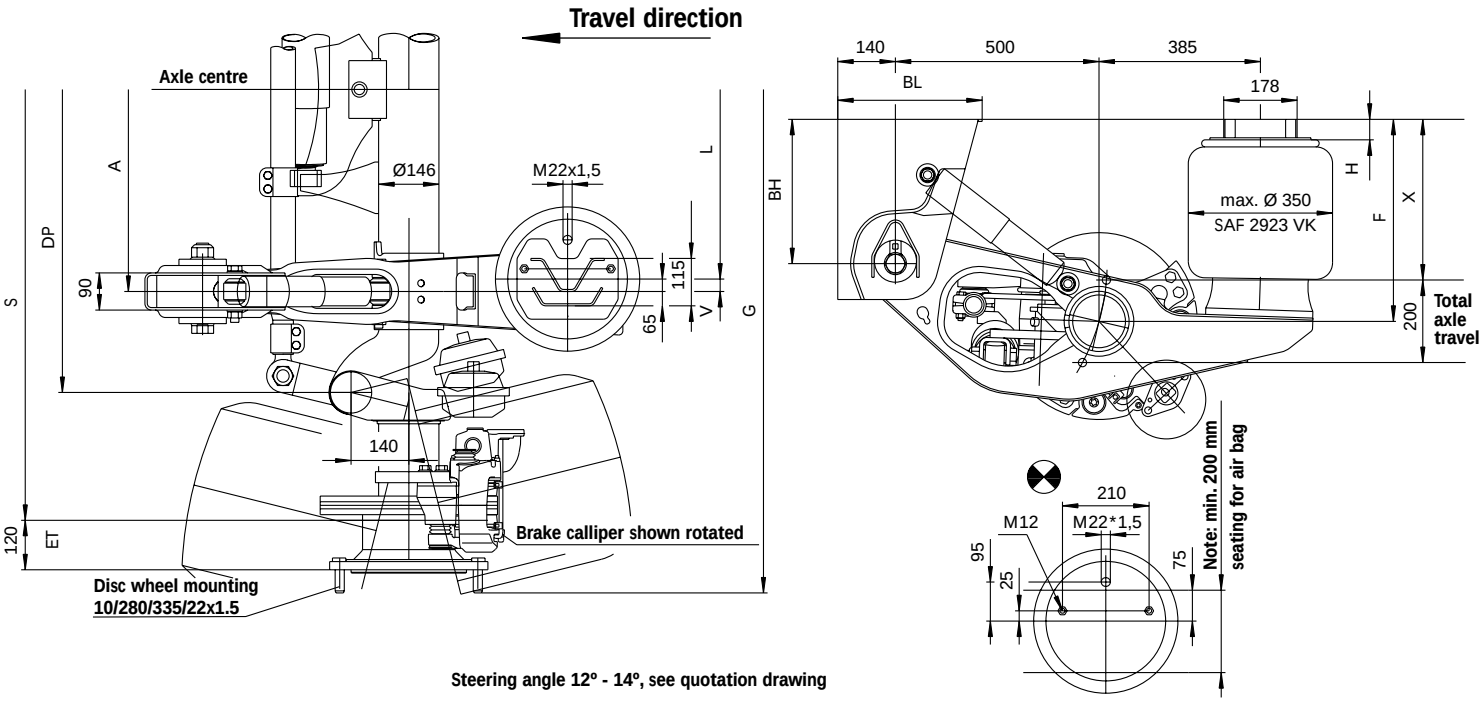

Steering angle 12° - 14°, see quotation drawing

Air suspension type	F Nominal ride height	Ride height range for single axles	for axle assemblies	for axle assemblies with lift	X (overall height) unladen aithout air	laden without air	BH hanger bracket	BL hanger bracket	H air sus-pension bracket	Weight approx.[1]
IO 44/3000 28	440	---	405-465	---	335	320	300	337	0	665
IO 49/3505 28	490	---	455-515	---	385	370	350	350	50	673

Axle type/axle load/brakes Tyres (example)	S / FM / RM Track width / spring centre frame centre	G Axle width	DP Pivot point centre	Tyres 385/65 R 22.5 V Offset	L Air bag centre	Weight approx.[1]
SK RLB 9022 ET = 120 mm 9000 kg SB 2243-11S 385/65 R 22.5	2040/980	2372	1420	0	980	see assembly weight
				30	920	
				60	860	
	2090/980	2422	1470	0	980	
				30	920	
				60	860	
	2090/1030	2422	1470	0	1030	
				30	970	
				60	910	
	2140/1080	2472	1520	0	1080	
				30	1020	
				60	960	

Lengths in mm, weights in kg

1) = without wheel nuts
Weight deviations lie within the permitted DIN tolerances for the respective manufacturing process

Ref. No.: IO-28-SKRLB9022

Nominal ride height 250 - 350 mm
Air bag SAF 2619 V

ON ROAD

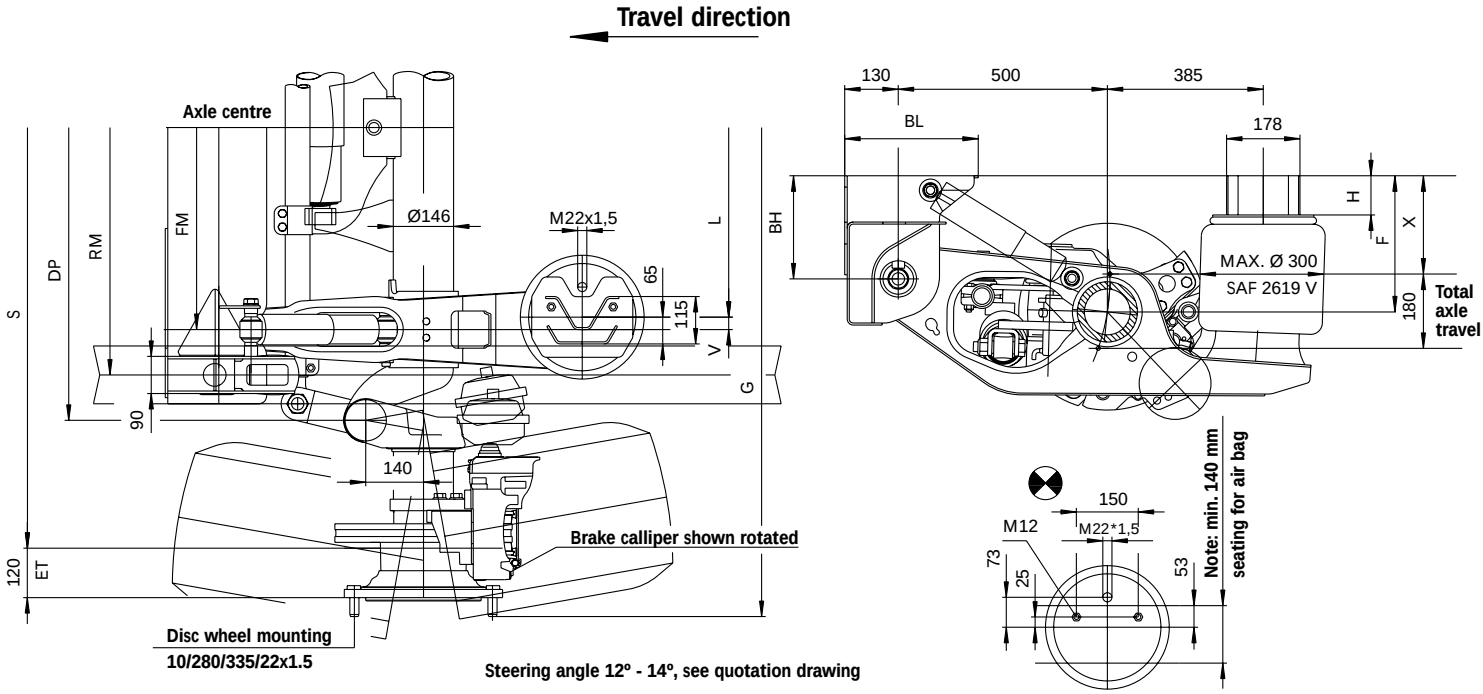

Air suspension type	F Nominal ride height	Ride height range for single axles	for axle assemblies	for axle assemblies with lift	X (overall height) unladen aithout air	laden without air	BH cross-member	BL cross-member	H air sus-pension bracket	Weight approx.[1]
IU 25/2000 33 Q	250	---	230-270	260-270	160	145	200	324	⊗ 0	---
IU 28/2005 33 Q	280	---	260-300	290-300	190	175	200	324	50	---
IU 30/2505 33 Q	300	---	280-320	310-320	210	195	250	324	50	---
IU 33/2510 33 Q	330	---	310-350	340-350	240	225	250	324	100	---
IU 35/3010 33 Q	350	---	330-370	360-370	260	245	300	335	100	---

Axle type/axle load/brakes Tyres (example)	S / FM / RM Track width / spring centre frame centre	G Axle width	DP Pivot point centre	Tyres 385/65 R 22.5 V Offset	L Air bag centre	Weight approx.[1]
SK RLB 9022 ET = 120 mm 9000 kg SB 2243-11S 385/65 R 22.5	2040/980/1200	2372	1420	0	980	see assembly weight
				30	920	
				60	860	
	2040/980/1300	2372	1420	0	980	
				30	920	
				60	860	
	2140/1080/1300	2472	1520	0	1080	
				30	1020	
				60	960	
	2140/1080/1400	2472	1520	0	1080	
				30	1020	
				60	960	

Lengths in mm, weights in kg

1) = without wheel nuts
Weight deviations lie within the permitted DIN tolerances for the respective manufacturing process

Ref. No.: IU-33-SKRLB9022-Q

Nominal ride height 290 - 420 mm
Air bag SAF 2923 VK

ON ROAD

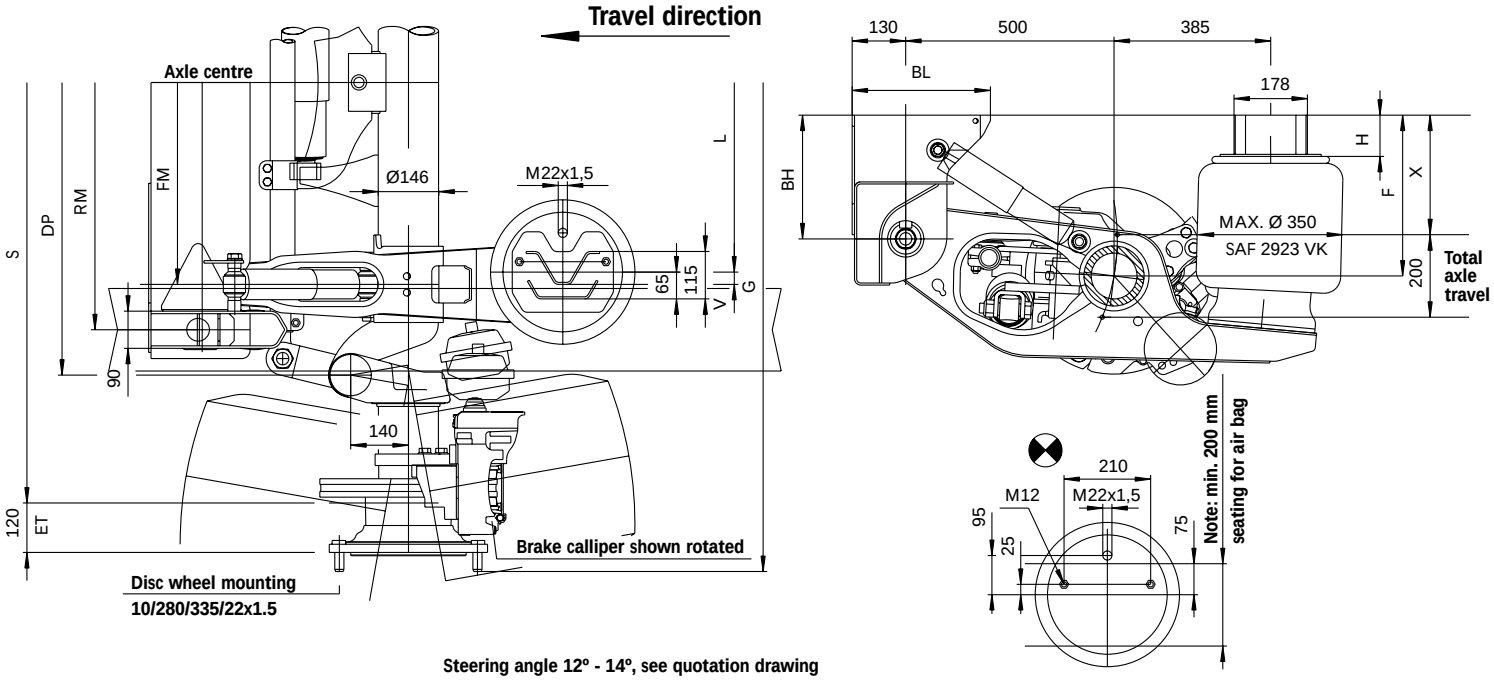

Steering angle 12º - 14º, see quotation drawing

Air suspension type	F Nominal ride height	Ride height range for single axles	for axle assemblies	for axle assemblies with lift	X (overall height) unladen aithout air	laden without air	BH cross-member	BL cross-member	H air sus-pension bracket	Weight approx.[1]
IU 29/2000 28 Q	290	---	260-320	290-320	190	175	200	324	⊗ 0	---
IU 31/2500 28 Q	310	---	280-340	310-340	210	195	250	324	⊗ 0	---
IU 34/2505 28 Q	340	---	310-370	340-370	240	225	250	324	50	---
IU 36/3005 28 Q	360	---	330-390	360-390	260	245	300	335	50	---
IU 39/3010 28 Q	390	---	360-420	390-420	290	275	300	335	100	---
IU 42/3015 28 Q	420	---	390-450	390-450	320	305	300	335	150	---

Axle type/axle load/brakes Tyres (example)	S / FM / RM Track width / spring centre frame centre	G Axle width	DP Pivot point centre	Tyres 385/65 R 22.5 V Offset	L Air bag centre	Weight approx.[1]
SK RLB 9022 ET = 120 mm 9000 kg SB 2243-11S 385/65 R 22.5	2040/980/1200	2372	1420	0	980	see assembly weight
				30	920	
				60	860	
	2040/980/1300	2372	1420	0	980	
				30	920	
				60	860	
	2140/1080/1300	2472	1520	0	1080	
				30	1020	
				60	960	
	2140/1080/1400	2472	1520	0	1080	
				30	1020	
				60	960	

Lengths in mm, weights in kg

1) = without wheel nuts
Weight deviations lie within the permitted DIN tolerances for the respective manufacturing process

Ref. No.: IU-28-SKRLB9022-Q

Nominal ride height 355 - 455 mm
Air bag SAF 2619 V

ON ROAD

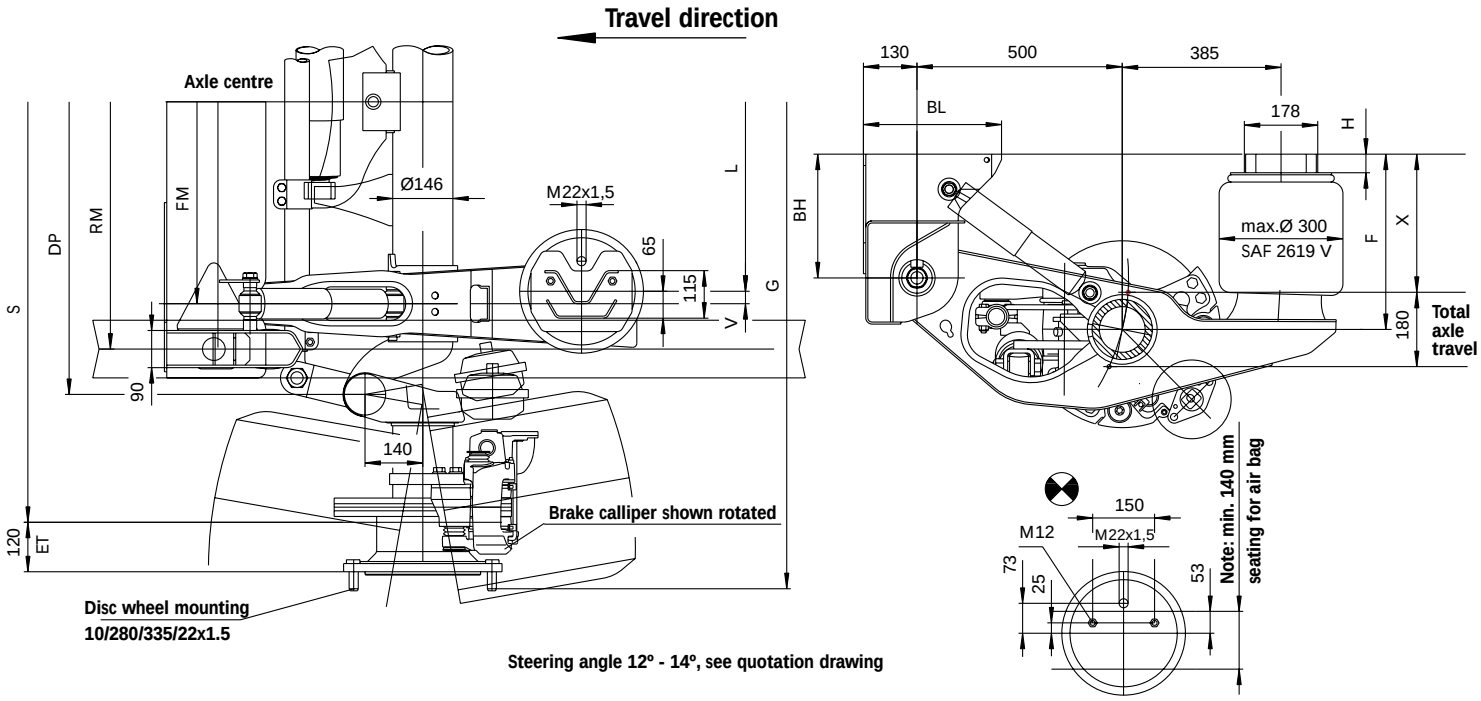

Air suspension type	F Nominal ride height	Ride height range for single axles	for axle assemblies	for axle assemblies with lift	X (overall height) unladen aithout air	laden without air	BH cross-member	BL cross-member	H air sus-pension bracket	Weight approx.[1]
IO 35/2000 33 Q	355	---	335-375	365-375	265	250	200	324	⊗ 0	---
IO 37/2500 33 Q	375	---	355-395	385-395	285	270	250	324	⊗ 0	---
IO 40/2505 33 Q	405	---	385-425	415-425	315	300	250	324	50	---
IO 42/3005 33 Q	425	---	405-445	435-445	335	320	300	335	50	---
IO 45/3010 33 Q	455	---	435-475	465-475	365	350	300	335	100	---

Axle type/axle load/brakes Tyres (example)	S / FM / RM Track width / spring centre frame centre	G Axle width	DP Pivot point centre	Tyres 385/65 R 22.5 V Offset	L Air bag centre	Weight approx.[1]
SK RLB 9022 ET = 120 mm 9000 kg SB 2243-11S 385/65 R 22.5	2040/980/1200	2372	1420	0	980	see assembly weight
				30	920	
				60	860	
	2040/980/1300	2372	1420	0	980	
				30	920	
				60	860	
	2140/1080/1300	2472	1520	0	1080	
				30	1020	
				60	960	
	2140/1080/1400	2472	1520	0	1080	
				30	1020	
				60	960	

Lengths in mm, weights in kg

1) = without wheel nuts
Weight deviations lie within the permitted DIN tolerances for the respective manufacturing process

Ref. No.: IO-33-SKRLB9022-Q

Nominal ride height 440 mm
Air bag SAF 2923 VK

ON ROAD

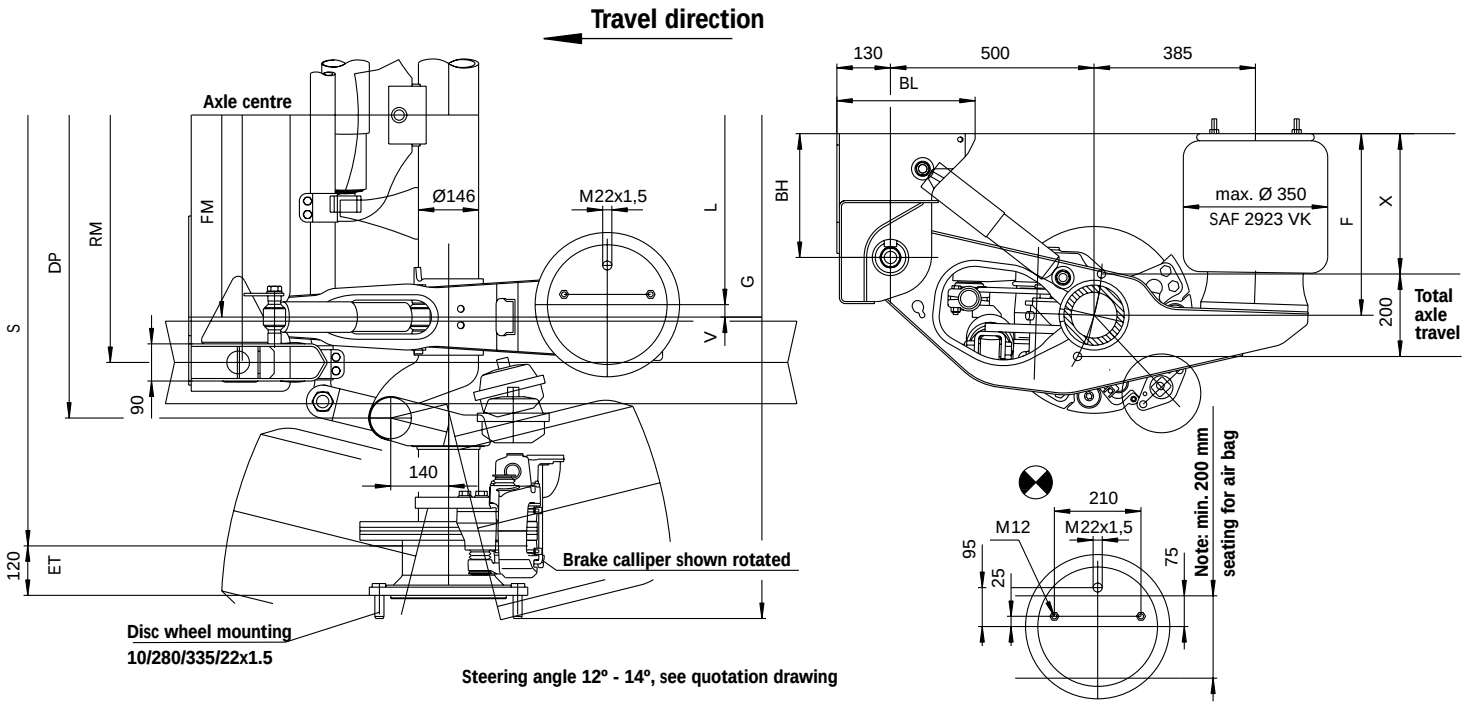

Air suspension type	F Nominal ride height	Ride height range for single axles	for axle assemblies	for axle assemblies with lift	X (overall height) unladen aithout air	laden without air	BH cross-member	BL cross-member	H air sus-pension bracket	Weight approx.[1]
IO 44/3000 28 Q	440	---	405-465	---	335	320	300	335	⊗ 0	---

Axle type/axle load/brakes Tyres (example)	S / FM / RM Track width / spring centre frame centre	G Axle width	DP Pivot point centre	Tyres 385/65 R 22.5 V Offset	L Air bag centre	Weight approx.[1]
SK RLB 9022 ET = 120 mm 9000 kg SB 2243-11S 385/65 R 22.5	2040/980/1200	2372	1420	0	980	see assembly weight
				30	920	
				60	860	
	2040/980/1300	2372	1420	0	980	
				30	920	
				60	860	
	2140/1080/1300	2472	1520	0	1080	
				30	1020	
				60	960	
	2140/1080/1400	2472	1520	0	1080	
				30	1020	
				60	960	

Lengths in mm, weights in kg

1) = without wheel nuts
Weight deviations lie within the permitted DIN tolerances for the respective manufacturing process

Ref. No.: IO-28-SKRLB9022-Q

Air Suspension Series
OFF ROAD

Rigid axles with drum brakes
for 22.5” wheels

Nominal ride height 250 - 350 mm
Air bag SAF 2918 V

OFF ROAD

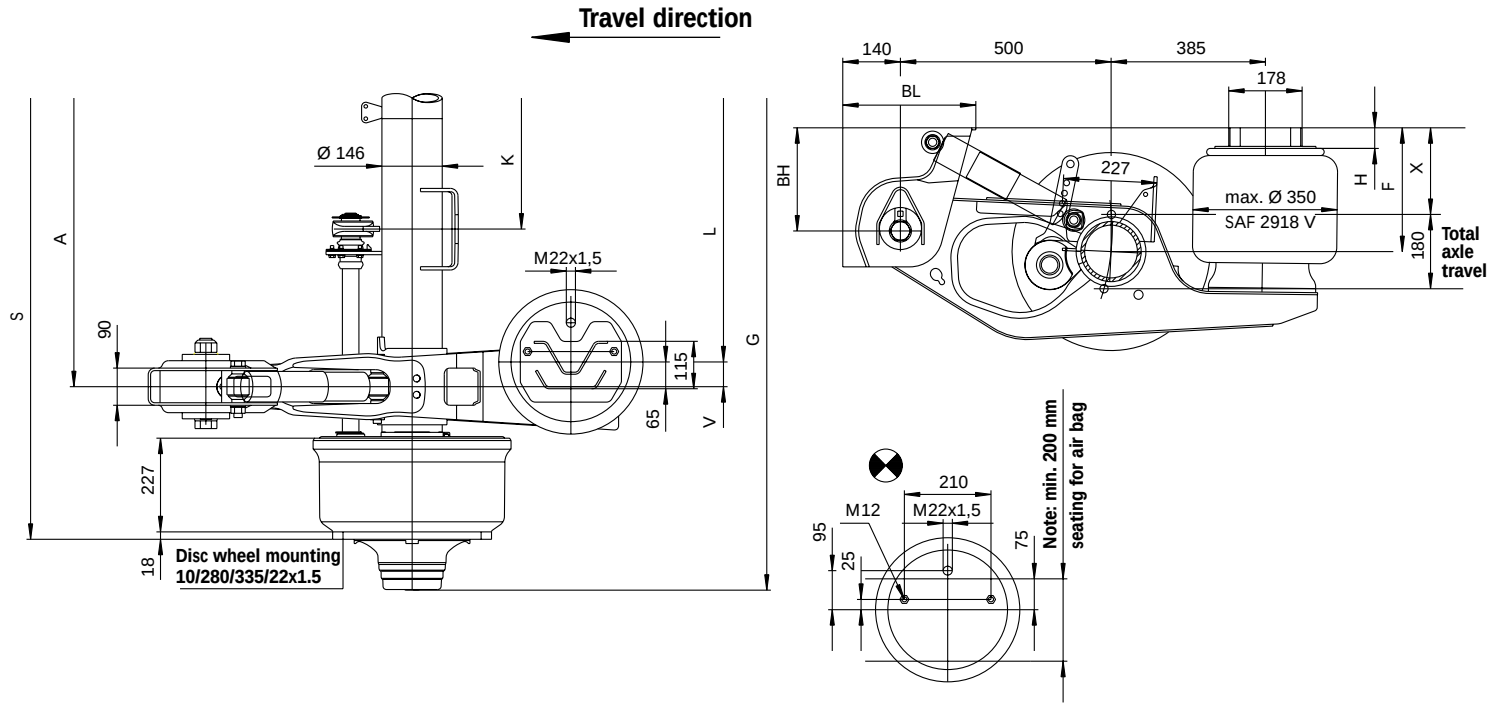

Air suspension type	F Nominal ride height	Ride height range for single axles	for axle assemblies	for axle assemblies with lift	X (overall height) unladen aithout air	laden without air	BH hanger bracket	BL hanger bracket	H air sus-pension bracket	Weight approx.[1]
IU 25/2000 27	250	220-270	230-270	260-270	160	145	200	310	⊗ 0	---
IU 28/2005 27	280	250-300	260-300	290-300	190	175	200	310	50	---
IU 30/2505 27	300	270-320	280-320	310-320	210	195	250	323	50	---
IU 33/2510 27	330	300-350	310-350	340-350	240	225	250	323	100	---
IU 35/3010 27	350	320-370	330-370	360-370	260	245	300	337	100	---

Axle type/ axle load/brakes Tyres (example)	S/A Track width/ bracket centre	G Axle width	K Baseplate centre	V Offset	L Air bag centre	Weight approx.[1]
SK RS 9042 9000 kg SNK 420 x 180 385/65 R 22.5	2040/1200	2287	478 [3]	0	1200 [2]	
				30	1140	
				60	1080	
	2040/1300	2287	536 [3]	60	1180	see assembly weight
	2090/1300	2337	586 [3]	30	1240	
				60	1180	

Lengths in mm, weights in kg

1) = without wheel nuts and slack adjuster
Weight deviations lie within the permitted DIN tolerances for the respective manufacturing process
2) = Max. possible tyre size 385/65 R 22.5 (distance between tyre and air bag!)
3) = Spring-loaded brake cylinders can be fitted

Ref. No.: IU-27-SKRS9042

Nominal ride height 290 - 420 mm
Air bag SAF 2923 V

OFF ROAD

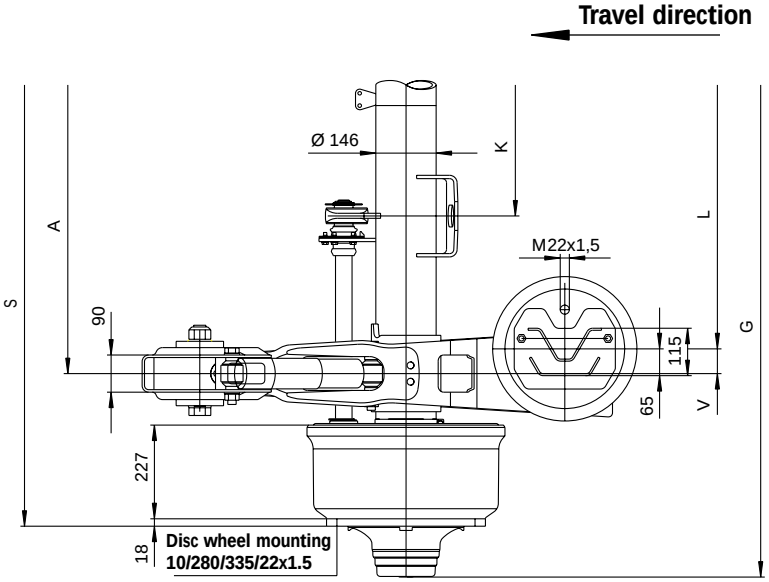

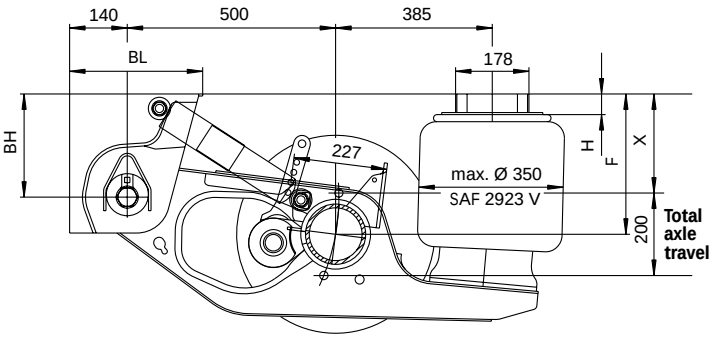

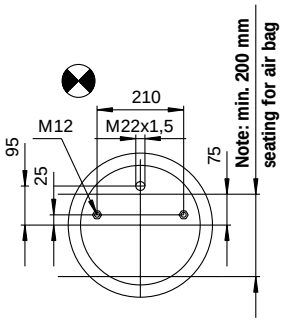

Air suspension type	F Nominal ride height	Ride height range for single axles	for axle assemblies	for axle assemblies with lift	X (overall height) unladen aithout air	laden without air	BH hanger bracket	BL hanger bracket	H air sus-pension bracket	Weight approx.[1]
IU 29/2000 31	290	245-315	255-315	285-315	185	170	200	310	⊗ 0	---
IU 31/2500 31	310	265-335	275-335	305-335	205	190	250	323	⊗ 0	---
IU 34/2505 31	340	295-365	305-365	335-365	235	220	250	323	50	---
IU 36/3005 31	360	315-385	325-385	355-385	255	240	300	337	50	---
IU 39/3010 31	390	345-415	355-415	385-415	285	270	300	337	100	---
IU 42/3015 31	420	375-445	385-445	415-445	315	300	300	337	150	---

Axle type/ axle load/brakes Tyres (example)	S/A Track width/ bracket centre	G Axle width	K Baseplate centre	V Offset	L Air bag centre	Weight approx.[1]
SK RS 9042 9000 kg SNK 420 x 180 385/65 R 22.5	2040/1200	2287	478 [3]	0	1200 [2]	
				30	1140	
				60	1080	
	2040/1300	2287	536 [3]	60	1180	see assembly weight
	2090/1300	2337	586 [3]	30	1240	
				60	1180	

Lengths in mm, weights in kg

1) = without wheel nuts and slack adjuster
Weight deviations lie within the permitted DIN tolerances for the respective manufacturing process
2) = Max. possible tyre size 385/65 R 22.5 (distance between tyre and air bag!)
3) = Spring-loaded brake cylinders can be fitted

Ref. No.: IU-31-SKRS9042

Nominal ride height 355 - 505 mm
Air bag SAF 2918 V

OFF ROAD

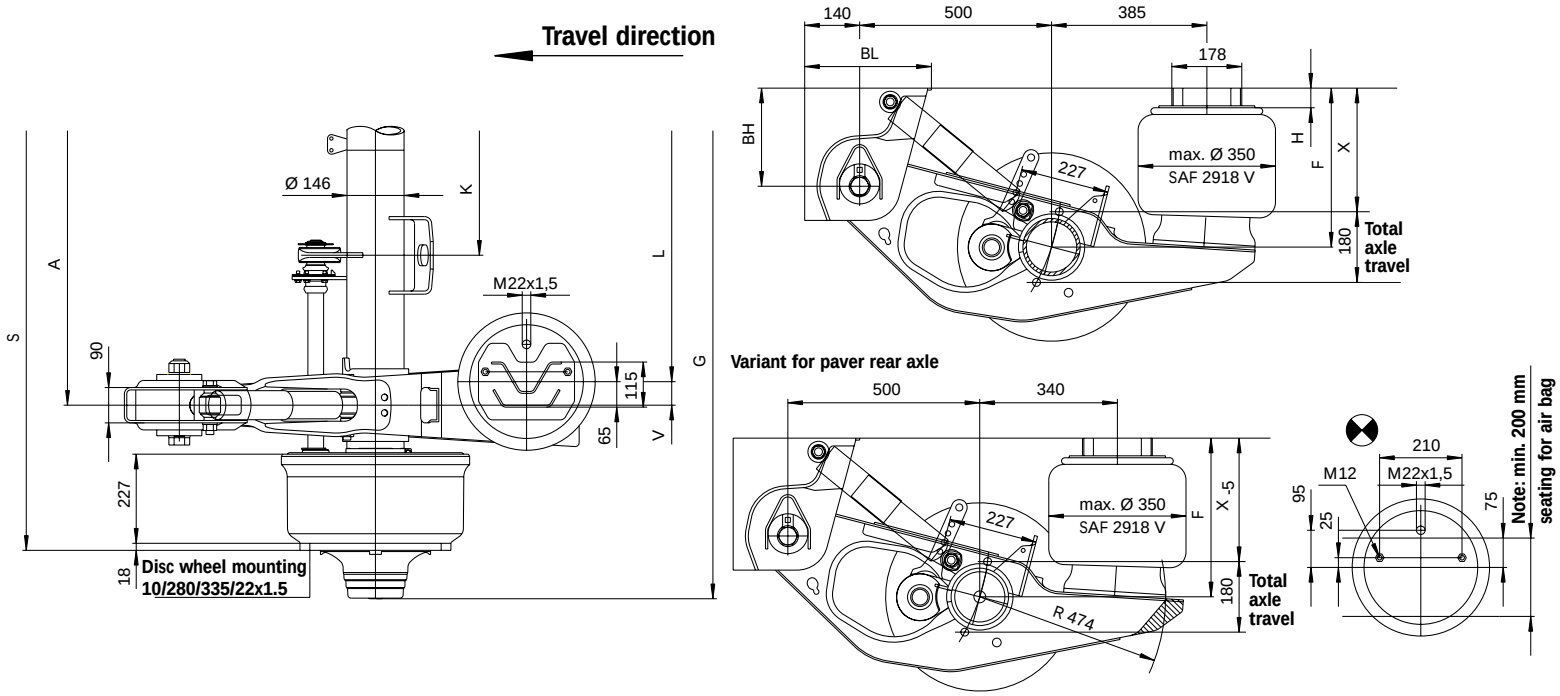

Air suspension type	F Nominal ride height	Ride height range for single axles	for axle assemblies	for axle assemblies with lift	X (overall height) unladen aithout air	laden without air	BH hanger bracket	BL hanger bracket	H air sus-pension bracket	Weight approx.[1]
IO 35/2000 27	355	325-375	335-375	365-375	265	250	200	310	⊗ 0	---
IO 37/2500 27	375	345-395	355-395	385-395	285	270	250	323	⊗ 0	---
IO 40/2505 27	405	375-425	385-425	415-425	315	300	250	323	50	---
IO 42/3005 27	425	395-445	405-445	435-445	335	320	300	337	50	---
IO 45/3010 27	455	425-475	435-475	465-475	365	350	300	337	100	---
IO 47/3510 27	475	445-495	455-495	485-495	385	370	350	350	100	---
IO 50/3515 27	505	475-525	485-525	515-525	415	400	350	350	150	---

Axle type/ axle load/brakes Tyres (example)	S/A Track width/ bracket centre	G Axle width	K Baseplate centre	V Offset	L Air bag centre	Weight approx.[1]
SK RS 9042 9000 kg SNK 420 x 180 385/65 R 22.5	2040/1200	2287	478 [3]	0	1200 [2]	
				30	1140	
				60	1080	
	2040/1300	2287	536 [3]	60	1180	see assembly weight
	2090/1300	2337	586 [3]	30	1240	
				60	1180	

Lengths in mm, weights in kg

1) = without wheel nuts and slack adjuster
Weight deviations lie within the permitted DIN tolerances for the respective manufacturing process
2) = Max. possible tyre size 385/65 R 22.5 (distance between tyre and air bag!)
3) = Spring-loaded brake cylinders can be fitted

Ref. No.: IO-27-SKRS9042

Nominal ride height 440 + 490 mm
Air bag SAF 2923 V

OFF ROAD

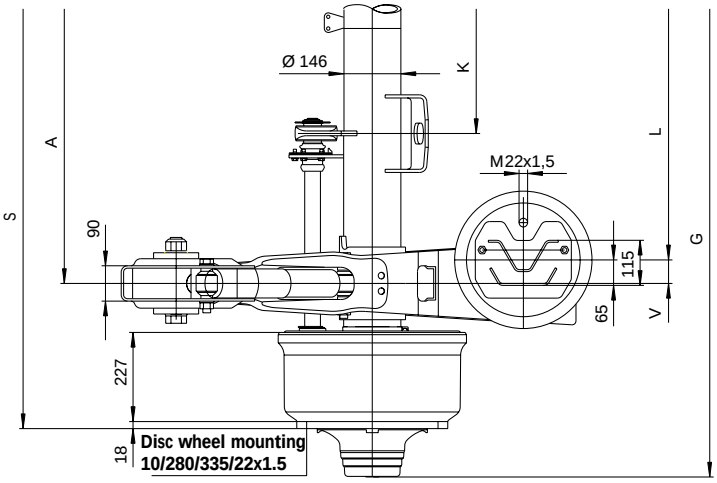

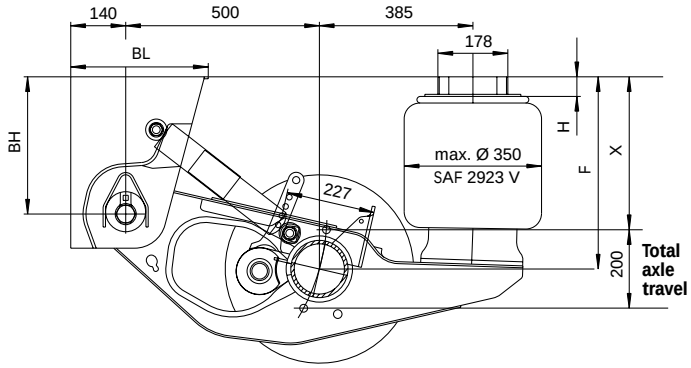

Variant for paver rear axle

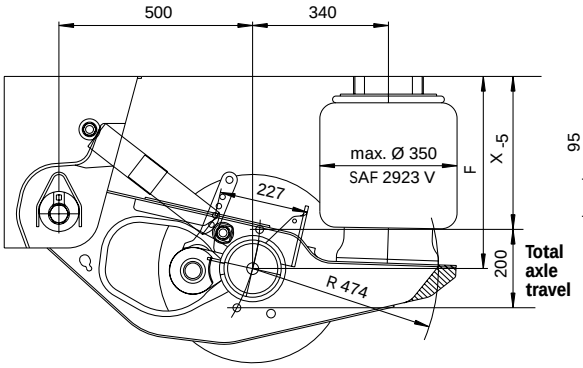

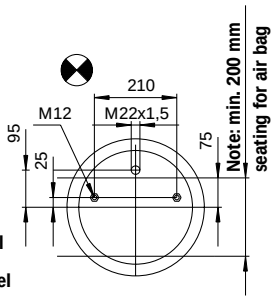

Air suspension type	F Nominal ride height	Ride height range for single axles	for axle assemblies	for axle assemblies with lift	X (overall height) unladen aithout air	laden without air	BH hanger bracket	BL hanger bracket	H air sus-pension bracket	Weight approx.[1]
IO 44/3000 31	440	390-460	400-460	---	330	315	300	337	⊗ 0	---
IO 49/3505 31	490	440-510	450-510	---	380	365	350	350	50	---

Axle type/ axle load/brakes Tyres (example)	S/A Track width/ bracket centre	G Axle width	K Baseplate centre	V Offset	L Air bag centre	Weight approx.[1]
SK RS 9042 9000 kg SNK 420 x 180 385/65 R 22.5	2040/1200	2287	478 [3]	0	1200 [2]	
				30	1140	
				60	1080	
	2040/1300	2287	536 [3]	60	1180	see assembly weight
	2090/1300	2337	586 [3]	30	1240	
				60	1180	

Lengths in mm, weights in kg

1) = without wheel nuts and slack adjuster
Weight deviations lie within the permitted DIN tolerances for the respective manufacturing process
2) = Max. possible tyre size 385/65 R 22.5 (distance between tyre and air bag!)
3) = Spring-loaded brake cylinders can be fitted

Ref. No.: IO-31-SKRS9042

Air Suspension Series
OFF ROAD

Rigid axles with disc brakes
for 22.5” and 19.5” wheels

Nominal ride height 250 - 350 mm
Air bag SAF 2918 V

OFF ROAD

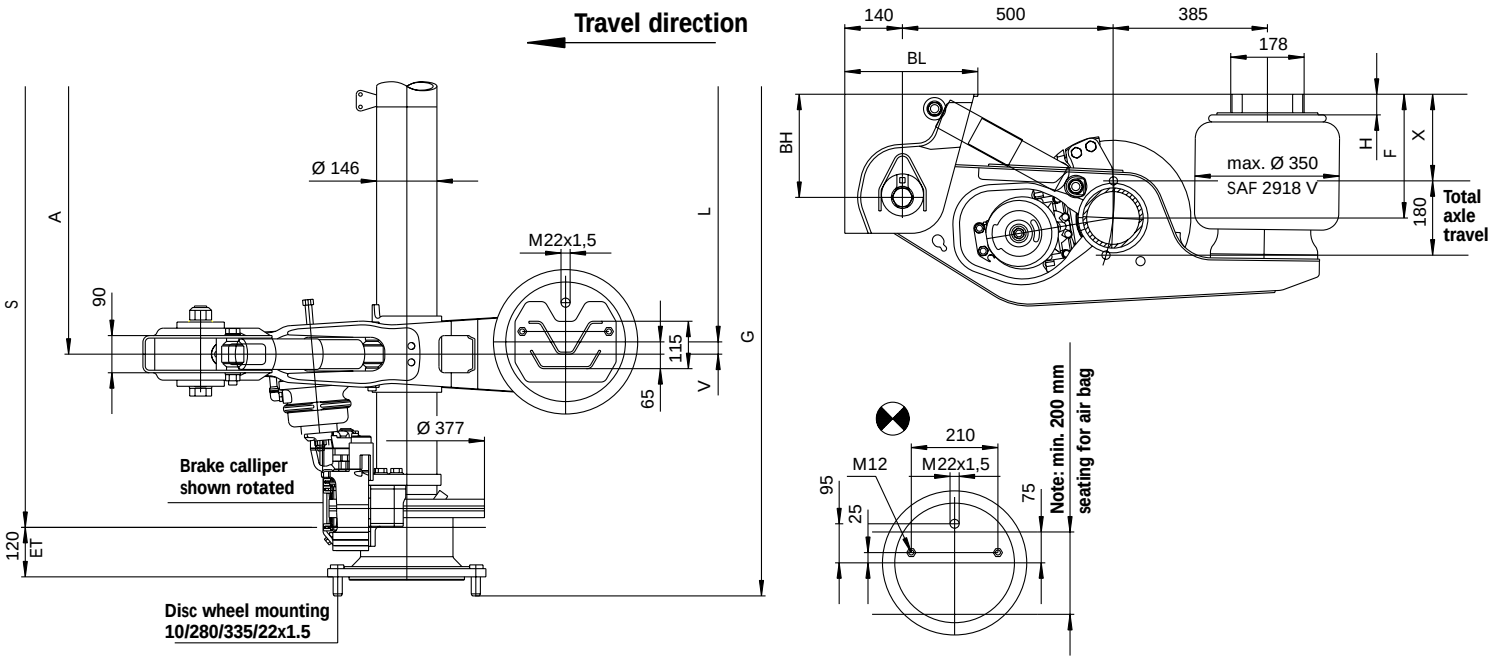

Air suspension type	F Nominal ride height	Ride height range for single axles	for axle assemblies	for axle assemblies with lift	X (overall height) unladen aithout air	laden without air	BH hanger bracket	BL hanger bracket	H air sus-pension bracket	Weight approx.[1]
IU 25/2000 27	250	220-270	230-270	260-270	160	145	200	310	⊗ 0	425
IU 28/2005 27	280	250-300	260-300	290-300	190	175	200	310	50	430
IU 30/2505 27	300	270-320	280-320	310-320	210	195	250	323	50	435
IU 33/2510 27	330	300-350	310-350	340-350	240	225	250	323	100	437
IU 35/3010 27	350	320-370	330-370	360-370	260	245	300	337	100	440

Axle type/axle load/brakes Tyres (example)	S / A Track width / bracket centre	G Axle width	Tyres 385/65 R 22.5 V Offset	L Air bag centre	425/55 R 19.5 V Offset	L Air bag centre	Weight approx.[1]
SK RB 9019-10	2040/1200	2372	0	1200 [2]	0	1200 [3]	
ET = 120 mm			30	1140	30	1140	
9000 kg			60	1080	60	1080	
SB 1937-11S	2040/1300	2372	60	1180	60	1180 [3]	see assembly weight
385 / 65 R 22.5							
425/55 R 19.5	2090/1300	2422	30	1240	30	1240 [3]	
			60	1180	60	1180	

Lengths in mm, weights in kg

1) = without wheel nuts
Weight deviations lie within the permitted DIN tolerances for the respective manufacturing process
2) = Max. possible tyre size 385/65 R 22.5 (distance between tyre and air bag!)
3) = Max. possible tyre size 425/55 R 19.5 (distance between tyre and air bag!)
Further tyre sizes on request

Ref. No.: IU-27-SKRB9019-10

Nominal ride height 290 - 420 mm
Air bag SAF 2923 V

OFF ROAD

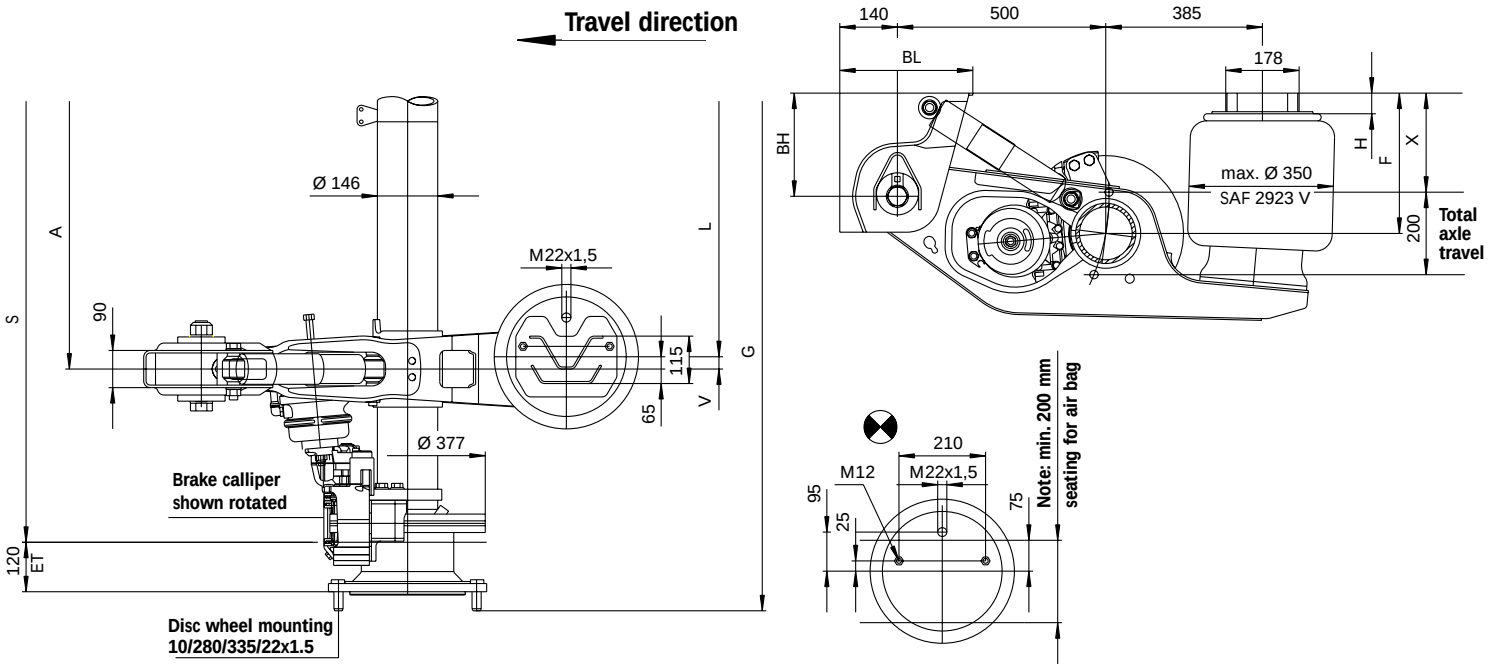

Air suspension type	F Nominal ride height	Ride height range for single axles	for axle assemblies	for axle assemblies with lift	X (overall height) unladen aithout air	laden without air	BH hanger bracket	BL hanger bracket	H air sus-pension bracket	Weight approx.[1]
IU 29/2000 31	290	245-315	255-315	285-315	185	170	200	310	⊗ 0	427
IU 31/2500 31	310	265-335	275-335	305-335	205	190	250	323	⊗ 0	432
IU 34/2505 31	340	295-365	305-365	335-365	235	220	250	323	50	437
IU 36/3005 31	360	315-385	325-385	355-385	255	240	300	337	50	440
IU 39/3010 31	390	345-415	355-415	385-415	285	270	300	337	100	442
IU 42/3015 31	420	375-445	385-445	415-445	315	300	300	337	150	444

Axle type/axle load/brakes Tyres (example)	S / A Track width / bracket centre	G Axle width	Tyres 385/65 R 22.5 V Offset	L Air bag centre	425/55 R 19.5 V Offset	L Air bag centre	Weight approx.[1]
SK RB 9019-10	2040/1200	2372	0	1200 [2]	0	1200 [3]	
ET = 120 mm			30	1140	30	1140	
9000 kg			60	1080	60	1080	
SB 1937-11S	2040/1300	2372	60	1180	60	1180 [3]	see assembly weight
385/65 R 22.5							
425/55 R 19.5	2090/1300	2422	30	1240	30	1240 [3]	
			60	1180	60	1180	

Lengths in mm, weights in kg

1) = without wheel nuts
Weight deviations lie within the permitted DIN tolerances for the respective manufacturing process
2) = Max. possible tyre size 385/65 R 22.5 (distance between tyre and air bag!)
3) = Max. possible tyre size 425/55 R 19.5 (distance between tyre and air bag!)
Further tyre sizes on request

Ref. No.: IU-31-SKRB9019-10

Nominal ride height 355 - 505 mm
Air bag SAF 2918 V

OFF ROAD

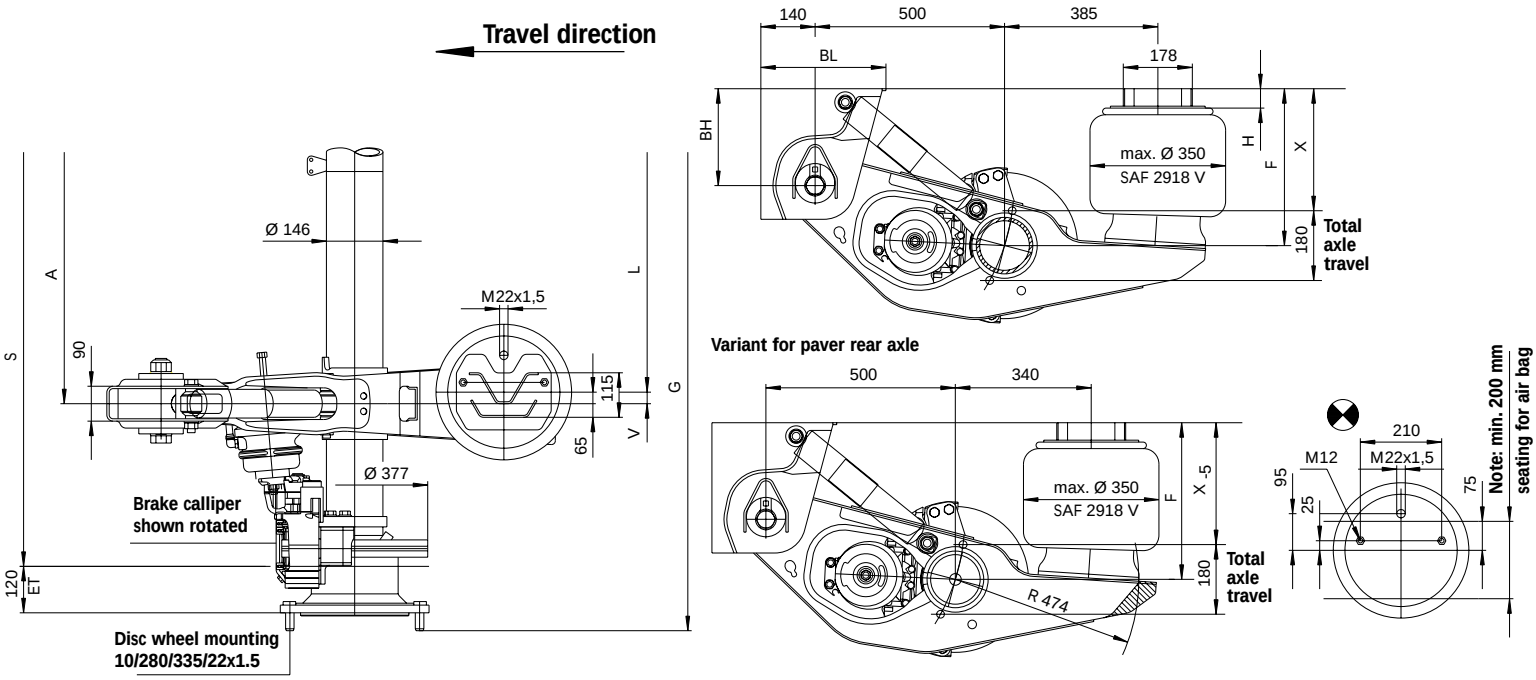

Air suspension type	F Nominal ride height	Ride height range for single axles	for axle assemblies	for axle assemblies with lift	X (overall height) unladen aithout air	laden without air	BH hanger bracket	BL hanger bracket	H air sus-pension bracket	Weight approx.[1]
IO 35/2000 27	355	325-375	335-375	365-375	265	250	200	310	⊗ 0	426
IO 37/2500 27	375	345-395	355-395	385-395	285	270	250	323	⊗ 0	430
IO 40/2505 27	405	375-425	385-425	415-425	315	300	250	323	50	435
IO 42/3005 27	425	395-445	405-445	435-445	335	320	300	337	50	438
IO 45/3010 27	455	425-475	435-475	465-475	365	350	300	337	100	440
IO 47/3510 27	475	445-495	455-495	485-495	385	370	350	350	100	444
IO 50/3515 27	505	475-525	485-525	515-525	415	400	350	350	150	446

Axle type/axle load/brakes Tyres (example)	S / A Track width / bracket centre	G Axle width	Tyres 385/65 R 22.5 V Offset	L Air bag centre	425/55 R 19.5 V Offset	L Air bag centre	Weight approx.[1]
SK RB 9019-10	2040/1200	2372	0	1200 [2]	0	1200 [3]	
ET = 120 mm			30	1140	30	1140	
9000 kg			60	1080	60	1080	
SB 1937-11S	2040/1300	2372	60	1180	60	1180 [3]	see assembly weight
385/65 R 22.5							
425/55 R 19.5	2090/1300	2422	30	1240	30	1240 [3]	
			60	1180	60	1180	

Lengths in mm, weights in kg

1) = without wheel nuts
Weight deviations lie within the permitted DIN tolerances for the respective manufacturing process
2) = Max. possible tyre size 385/65 R 22.5 (distance between tyre and air bag!)
3) = Max. possible tyre size 425/55 R 19.5 (distance between tyre and air bag!)
Further tyre sizes on request

Ref. No.: IO-27-SKRB9019-10

Nominal ride height 440 + 490 mm
Air bag SAF 2923 V

OFF ROAD

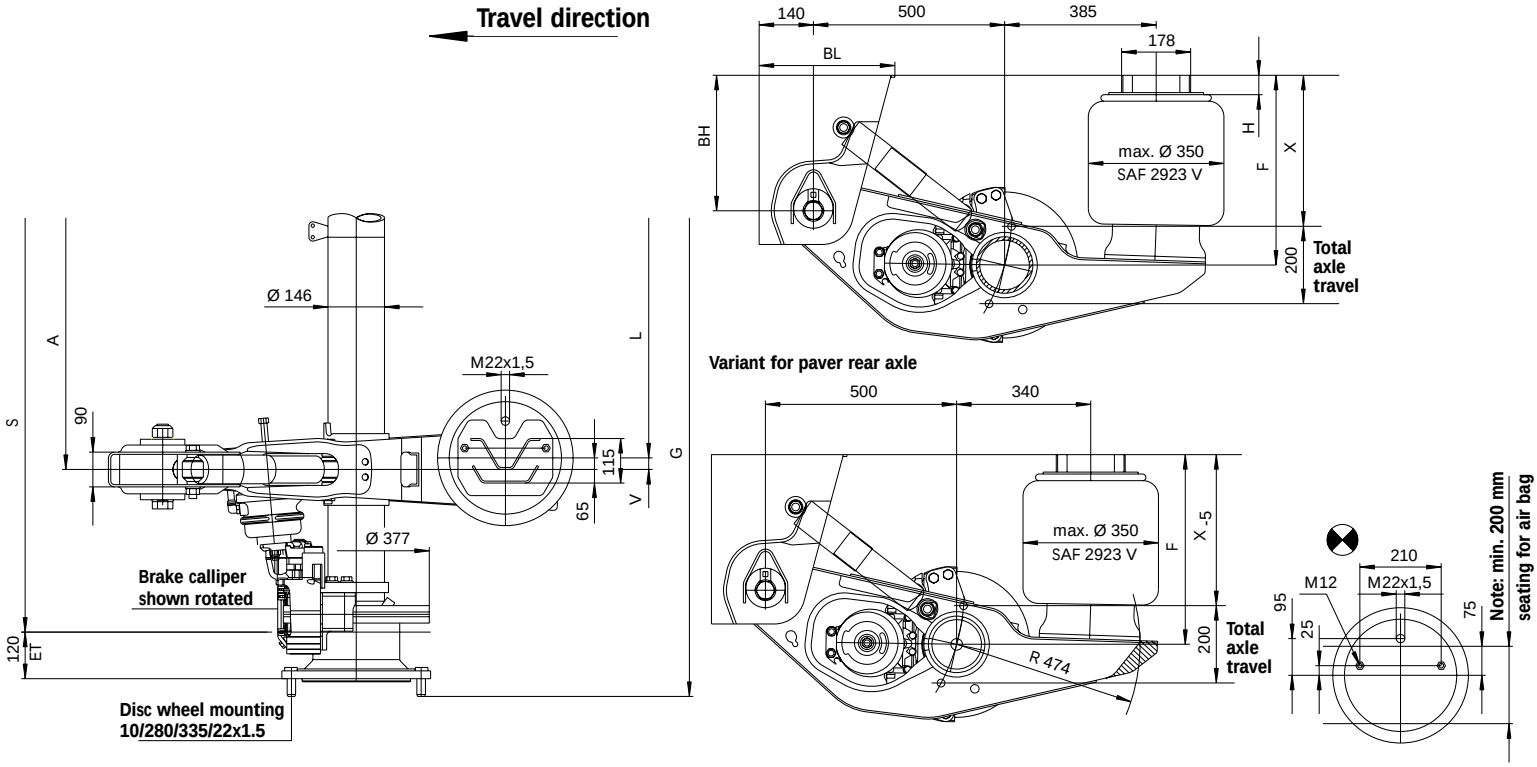

Air suspension type	F Nominal ride height	Ride height range for single axles	for axle assemblies	for axle assemblies with lift	X (overall height) unladen aithout air	laden without air	BH hanger bracket	BL hanger bracket	H air sus-pension bracket	Weight approx.[1]
IO 44/3000 31	440	390-460	400-460	---	330	315	300	337	⊗ 0	435
IO 49/3505 31	490	440-510	450-510	---	380	365	350	350	50	444

Axle type/axle load/brakes Tyres (example)	S / A Track width / bracket centre	G Axle width	Tyres 385/65 R 22.5 V Offset	L Air bag centre	425/55 R 19.5 V Offset	L Air bag centre	Weight approx.[1]
SK RB 9019-10	2040/1200	2372	0	1200 [2]	0	1200 [3]	
ET = 120 mm			30	1140	30	1140	
9000 kg			60	1080	60	1080	
SB 1937-11S	2040/1300	2372	60	1180	60	1180 [3]	see assembly weight
385/65 R 22.5							
425/55 R 19.5	2090/1300	2422	30	1240	30	1240 [3]	
			60	1180	60	1180	

Lengths in mm, weights in kg

1) = without wheel nuts
Weight deviations lie within the permitted DIN tolerances for the respective manufacturing process
2) = Max. possible tyre size 385/65 R 22.5 (distance between tyre and air bag!)
3) = Max. possible tyre size 425/55 R 19.5 (distance between tyre and air bag!)
Further tyre sizes on request

Ref. No.: IO-31-SKRB9019-10

Air Suspension Series
OFF ROAD

Rigid axles with disc brakes
for 22.5” wheels

Nominal ride height 250 - 350 mm
Air bag SAF 2918 V

OFF ROAD

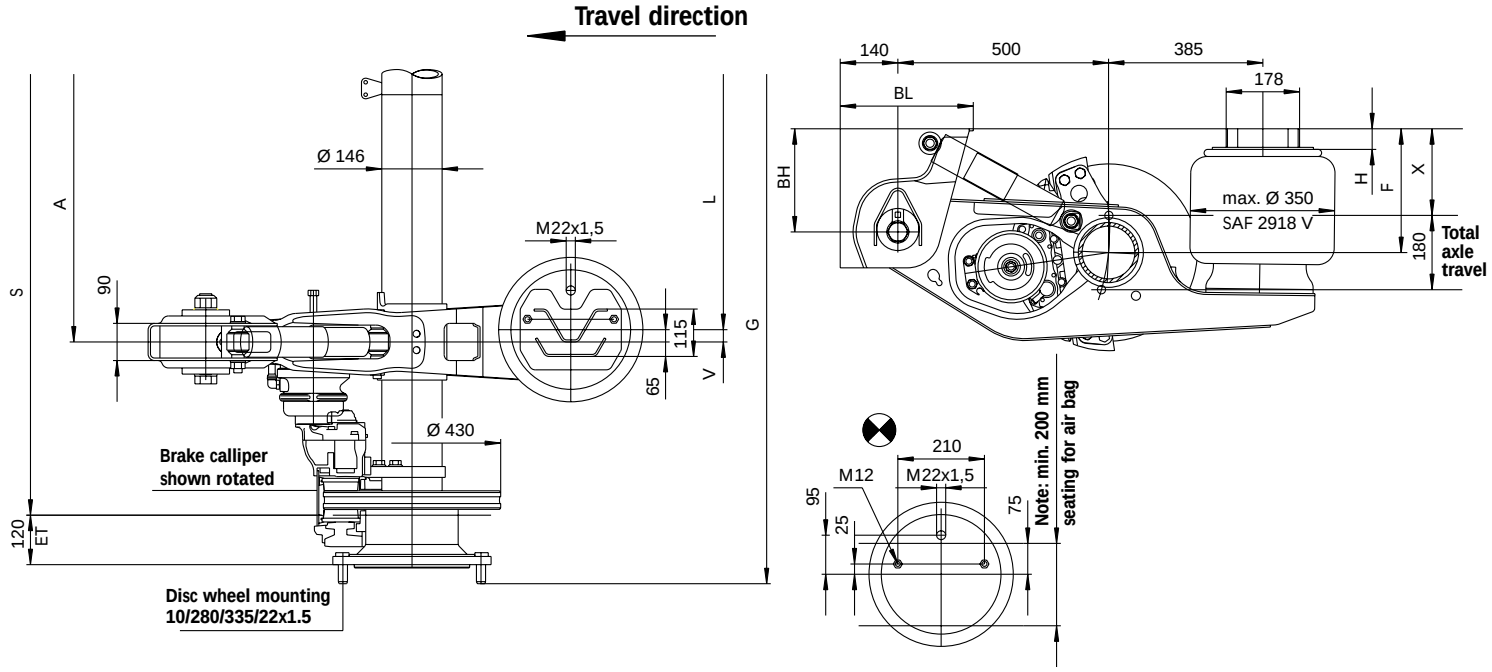

Air suspension type	F Nominal ride height	Ride height range for single axles	for axle assemblies	for axle assemblies with lift	X (overall height) unladen aithout air	laden without air	BH hanger bracket	BL hanger bracket	H air sus-pension bracket	Weight approx.[1]
IU 25/2000 27	250	220-270	230-270	260-270	160	145	200	310	⊗ 0	473
IU 28/2005 27	280	250-300	260-300	290-300	190	175	200	310	50	478
IU 30/2505 27	300	270-320	280-320	310-320	210	195	250	323	50	483
IU 33/2510 27	330	300-350	310-350	340-350	240	225	250	323	100	485
IU 35/3010 27	350	320-370	330-370	360-370	260	245	300	337	100	488

Axle type/axle load/brakes Tyres (example)	S / A Track width / bracket centre	G Axle width	V Offset	L Air bag centre	Weight approx. [1]
SK RB 9022	2040/1200	2372	0	1200 [2]	
ET = 120 mm			30	1140	
9000 kg			60	1080	
SB 2243-11S	2040/1300	2372	60	1180	see assembly weight
385/65 R 22.5					
	2090/1300	2422	30	1240	
			60	1180	

Lengths in mm, weights in kg

1) = without wheel nuts
Weight deviations lie within the permitted DIN tolerances for the respective manufacturing process
2) = Max. possible tyre size 385/65 R 22.5 (distance between tyre and air bag!)

Ref. No.: IU-27-SKRB9022

Nominal ride height 290 - 420 mm
Air bag SAF 2923 V

OFF ROAD

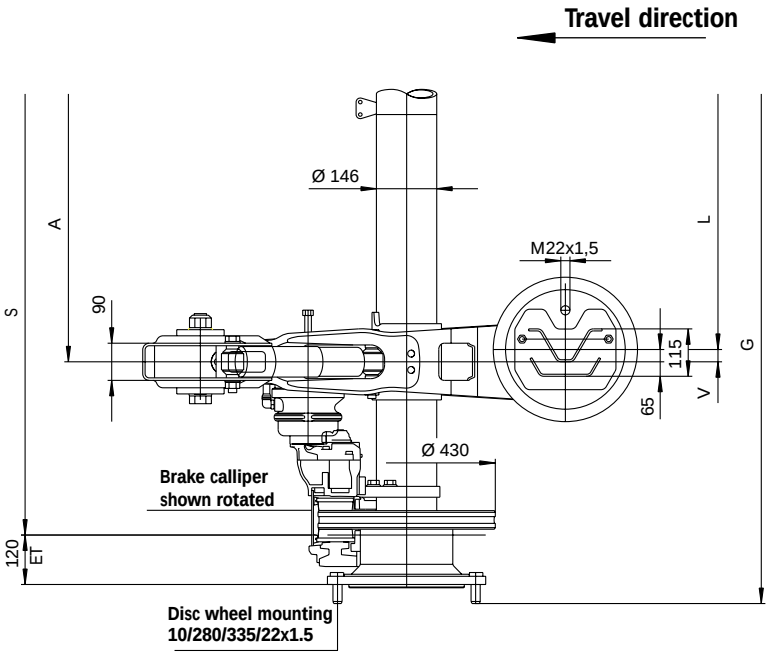

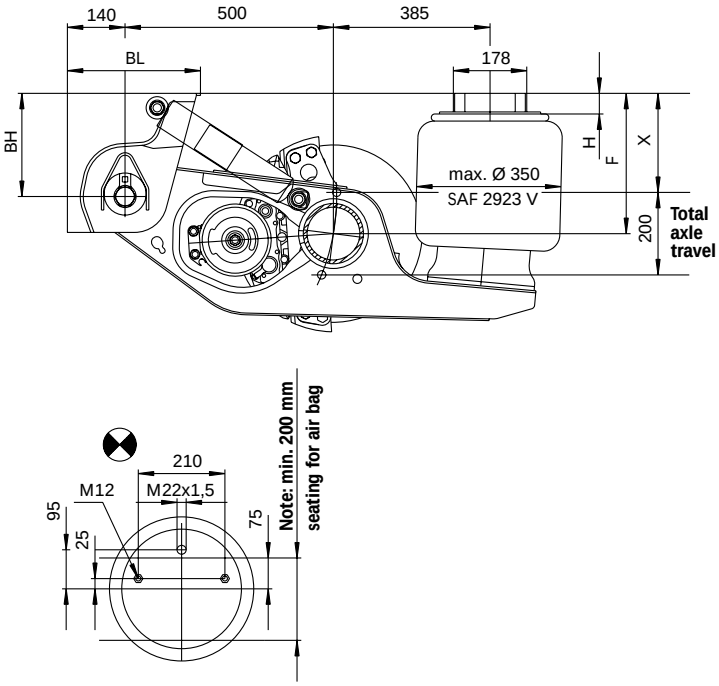

Air suspension type	F Nominal ride height	Ride height range for single axles	for axle assemblies	for axle assemblies with lift	X (overall height) unladen aithout air	laden without air	BH hanger bracket	BL hanger bracket	H air sus-pension bracket	Weight approx.[1]
IU 29/2000 31	290	245-315	255-315	285-315	185	170	200	310	⊗ 0	475
IU 31/2500 31	310	265-335	275-335	305-335	205	190	250	323	⊗ 0	480
IU 34/2505 31	340	295-365	305-365	335-365	235	220	250	323	50	484
IU 36/3005 31	360	315-385	325-385	355-385	255	240	300	337	50	488
IU 39/3010 31	390	345-415	355-415	385-415	285	270	300	337	100	490
IU 42/3015 31	420	375-445	385-445	415-445	315	300	300	337	150	492

Axle type/axle load/brakes Tyres (example)	S / A Track width / bracket centre	G Axle width	V Offset	L Air bag centre	Weight approx. [1]
SK RB 9022	2040/1200	2372	0	1200 [2]	
ET = 120 mm			30	1140	
9000 kg			60	1080	
SB 2243-11S	2040/1300	2372	60	1180	see assembly weight
385/65 R 22.5					
	2090/1300	2422	30	1240	
			60	1180	

Lengths in mm, weights in kg

1) = without wheel nuts
Weight deviations lie within the permitted DIN tolerances for the respective manufacturing process
2) = Max. possible tyre size 385/65 R 22.5 (distance between tyre and air bag!)

Ref. No.: IU-31-SKRB9022

Nominal ride height 355 - 505 mm
Air bag SAF 2918 V

OFF ROAD

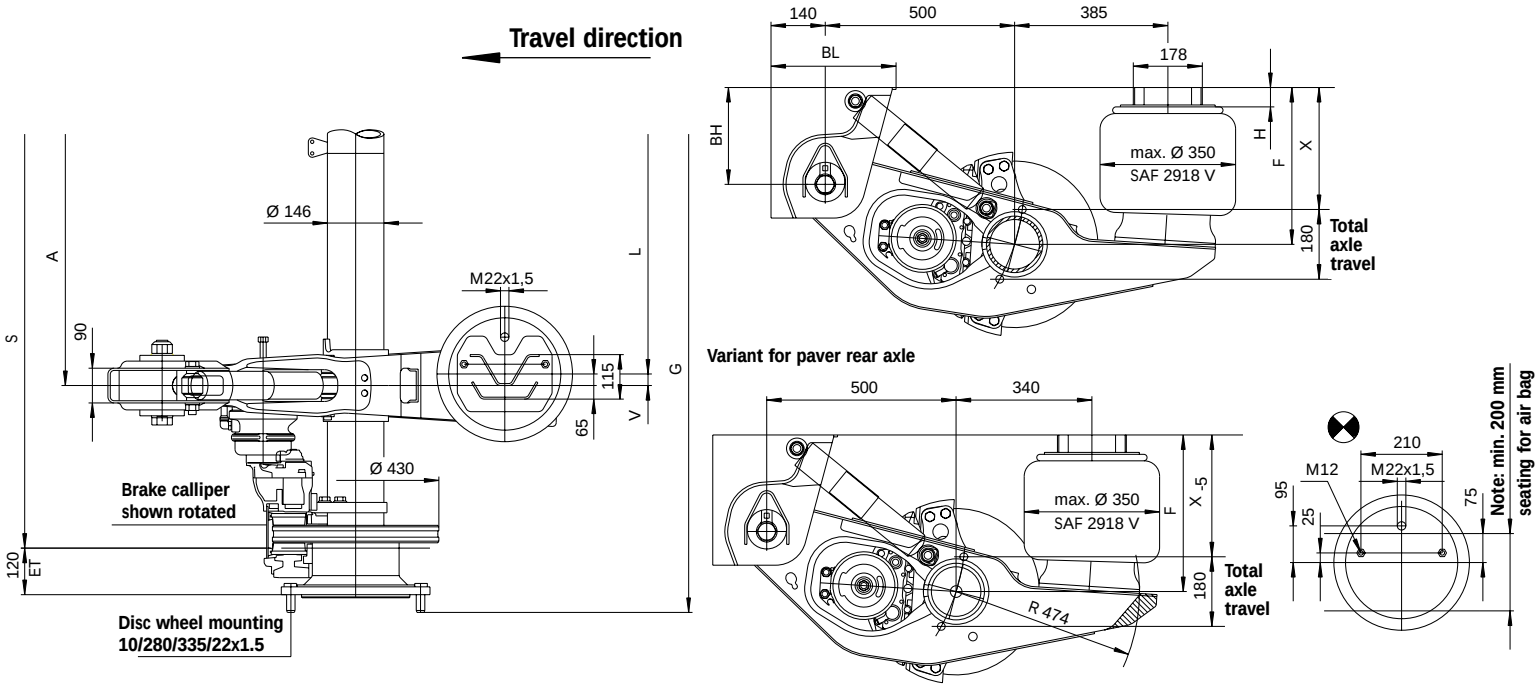

Air suspension type	F Nominal ride height	Ride height range for single axles	for axle assemblies	for axle assemblies with lift	X (overall height) unladen aithout air	laden without air	BH hanger bracket	BL hanger bracket	H air sus-pension bracket	Weight approx.[1]
IO 35/2000 27	355	325-375	335-375	365-375	265	250	200	310	⊗ 0	474
IO 37/2500 27	375	345-395	355-395	385-395	285	270	250	323	⊗ 0	478
IO 40/2505 27	405	375-425	385-425	415-425	315	300	250	323	50	483
IO 42/3005 27	425	395-445	405-445	435-445	335	320	300	337	50	486
IO 45/3010 27	455	425-475	435-475	465-475	365	350	300	337	100	488
IO 47/3510 27	475	445-495	455-495	485-495	385	370	350	350	100	492
IO 50/3515 27	505	475-525	485-525	515-525	415	400	350	350	150	494

Axle type/axle load/brakes Tyres (example)	S / A Track width / bracket centre	G Axle width	V Offset	L Air bag centre	Weight approx. [1]
SK RB 9022	2040/1200	2372	0	1200 [2]	
ET = 120 mm			30	1140	
9000 kg			60	1080	
SB 2243-11S	2040/1300	2372	60	1180	see assembly weight
385/65 R 22.5					
	2090/1300	2422	30	1240	
			60	1180	

Lengths in mm, weights in kg

1) = without wheel nuts
Weight deviations lie within the permitted DIN tolerances for the respective manufacturing process
2) = Max. possible tyre size 385/65 R 22.5 (distance between tyre and air bag!)

Ref. No.: IO-27-SKRB9022

Nominal ride height 440 + 490 mm
Air bag SAF 2923 V

OFF ROAD

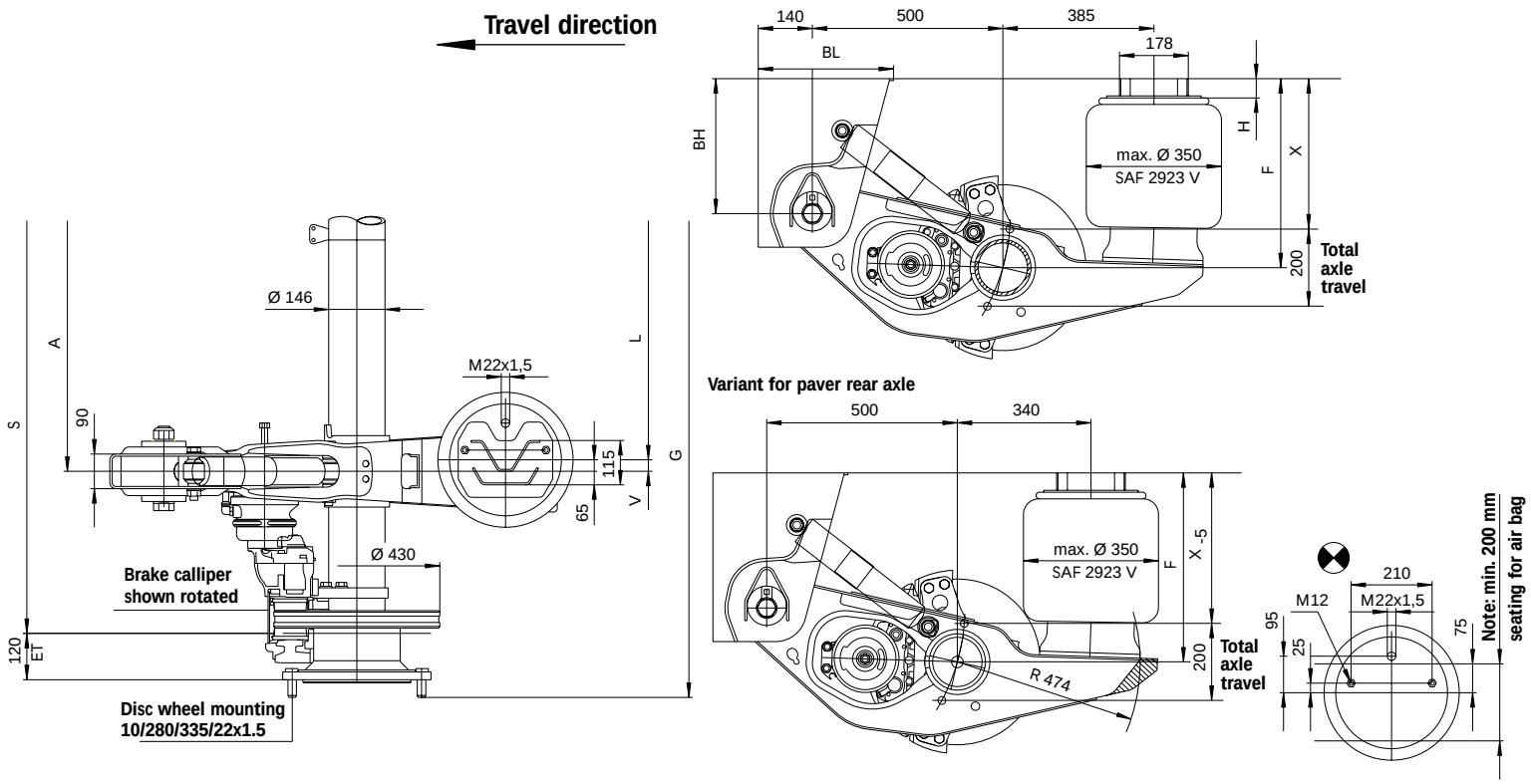

Air suspension type	F Nominal ride height	Ride height range for single axles	for axle assemblies	for axle assemblies with lift	X (overall height) unladen aithout air	laden without air	BH hanger bracket	BL hanger bracket	H air sus-pension bracket	Weight approx.[1]
IO 44/3000 31	440	390-460	400-460	---	330	315	300	337	⊗ 0	483
IO 49/3505 31	490	440-510	450-510	---	380	365	350	350	50	492

Axle type/axle load/brakes Tyres (example)	S / A Track width / bracket centre	G Axle width	V Offset	L Air bag centre	Weight approx. [1]
SK RB 9022	2040/1200	2372	0	1200 [2]	
ET = 120 mm			30	1140	
9000 kg			60	1080	
SB 2243-11S	2040/1300	2372	60	1180	see assembly weight
385/65 R 22.5					
	2090/1300	2422	30	1240	
			60	1180	

Lengths in mm, weights in kg

1) = without wheel nuts
Weight deviations lie within the permitted DIN tolerances for the respective manufacturing process
2) = Max. possible tyre size 385/65 R 22.5 (distance between tyre and air bag!)

Ref. No.: IO-31-SKRB9022

Air Bags

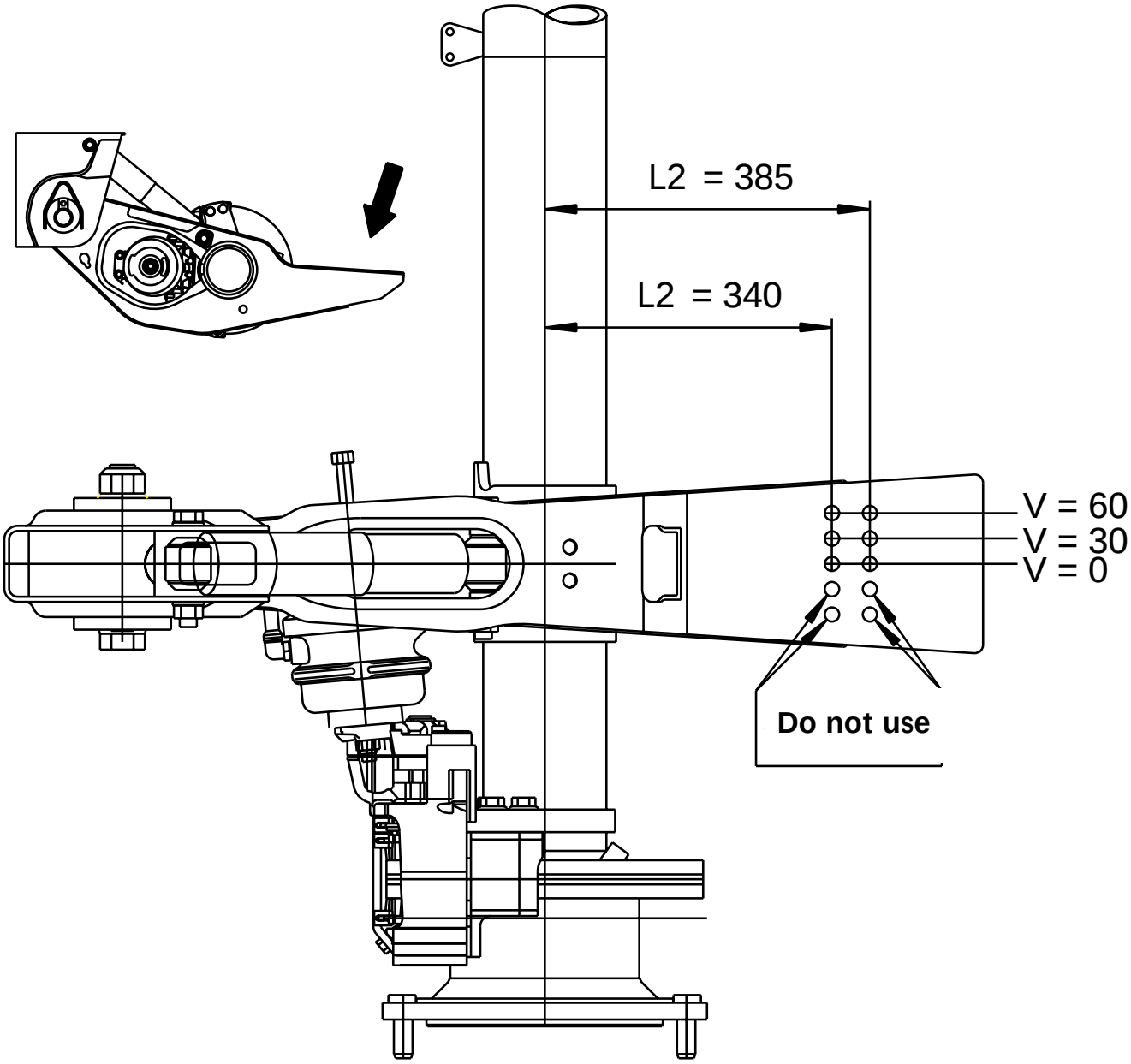
L2 = 385
L2 = 340
V = 60
V = 30
V = 0
Do not use

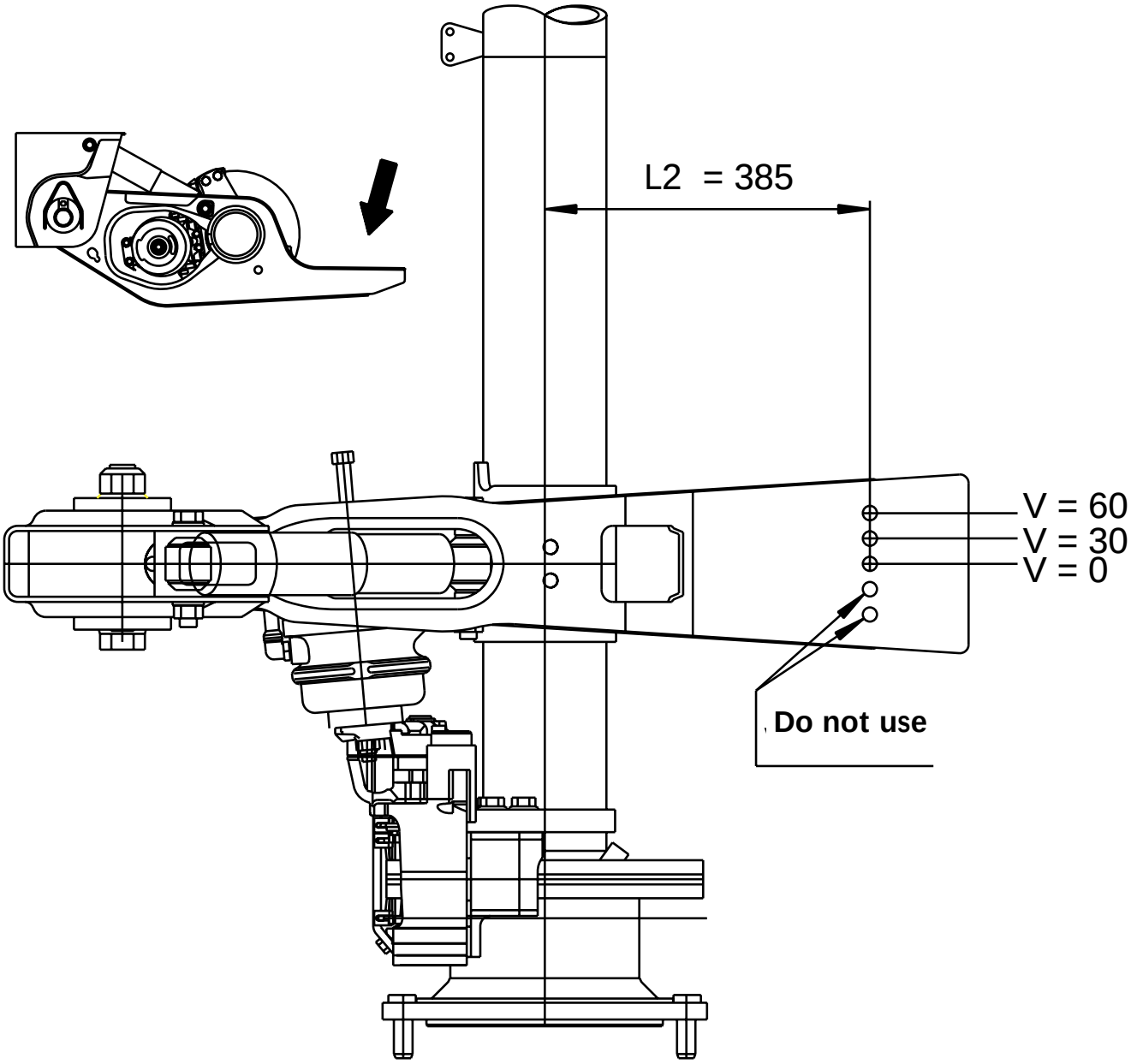
L2 = 385
V = 60
V = 30
V = 0
Do not use

Air pressure for SAF air suspension INTRADISC *plus* series IU

with air bag SAF 2619 V (max. diameter 300)

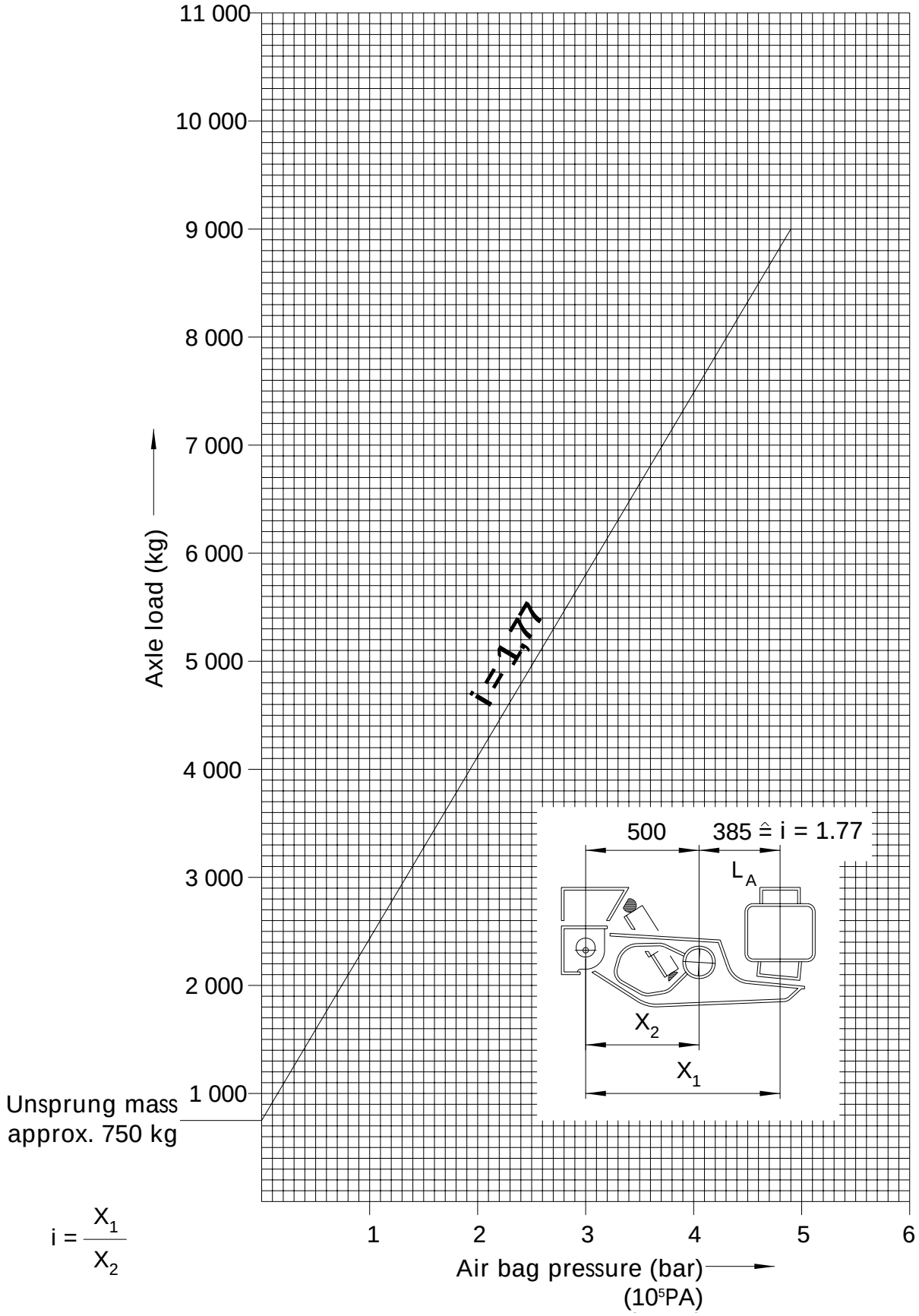

$$i = \frac{X_1}{X_2}$$

i = 1.77 L2 = 385 mm with air bag SAF 2619 V

Ref. No.: 0 229 0039 00

Air pressures for SAF air suspension INTRADISC *plus* series IU

with air bag SAF 2923 VK / 2923 V / 2918 V (max. diameter 350)

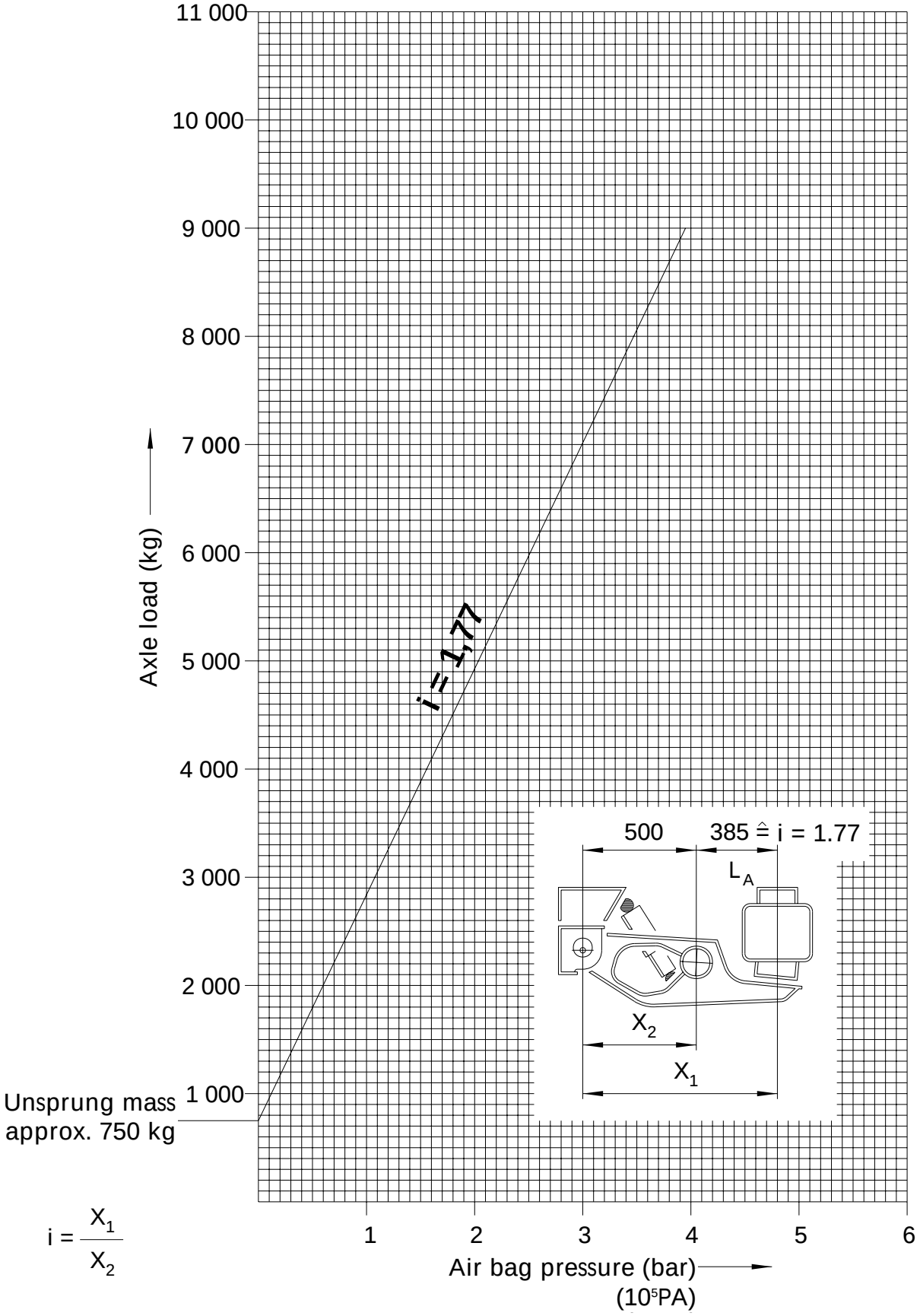

$$i = \frac{X_1}{X_2}$$

i = 1.77 L2 = 385 mm with air bag SAF 2923 VK

Ref. No.: 0 229 0040 00

Air pressures for SAF air suspension INTRADISC *plus* series IO

with air bag SAF 2619 V (max. diameter 300)

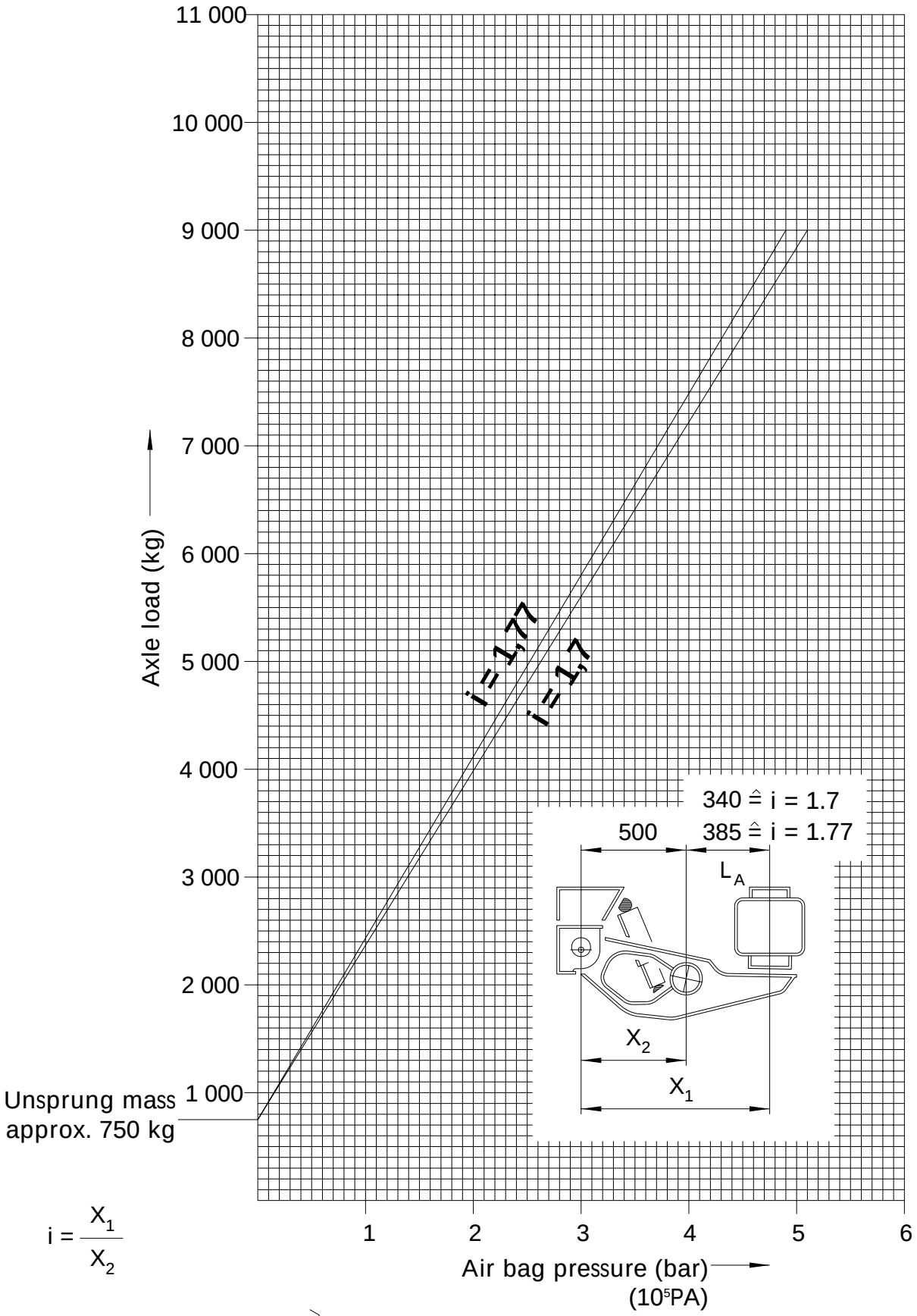

$$i = \frac{X_1}{X_2}$$

i = 1.7 L2 = 340 mm
i = 1.77 L2 = 385 mm
} with air bag SAF 2619 V

Ref. No.: 0 229 0041 00

Air pressures for SAF air suspension INTRADISC *plus* series IO

with air bag SAF 2923 VK / 2923 V / 2918 V (max. diameter 350)

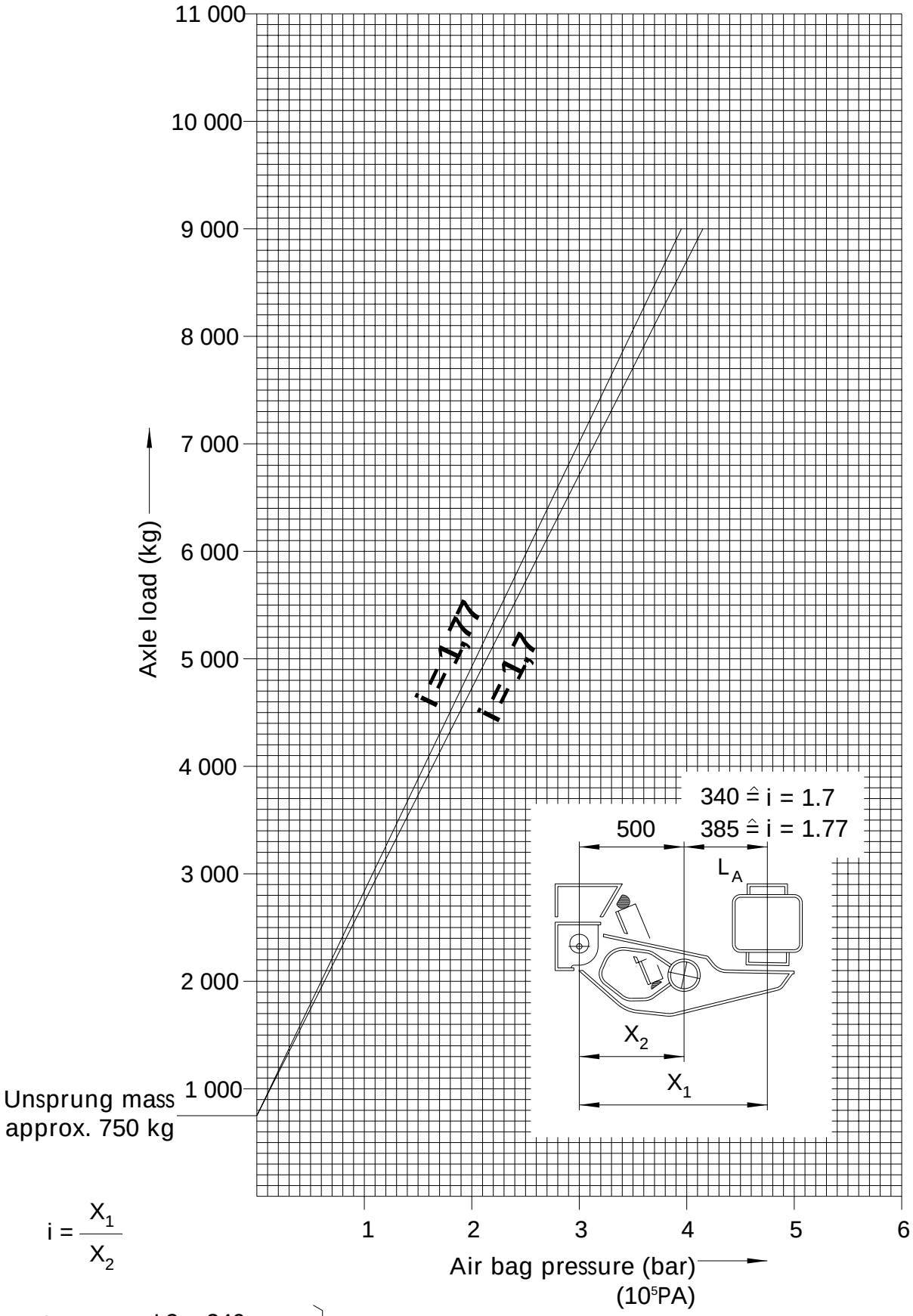

$$i = \frac{X_1}{X_2}$$

i = 1.7 L2 = 340 mm
i = 1.77 L2 = 385 mm
} with air bag SAF 2923 VK

Ref. No.: 0 229 0041 00

Air bag code 33

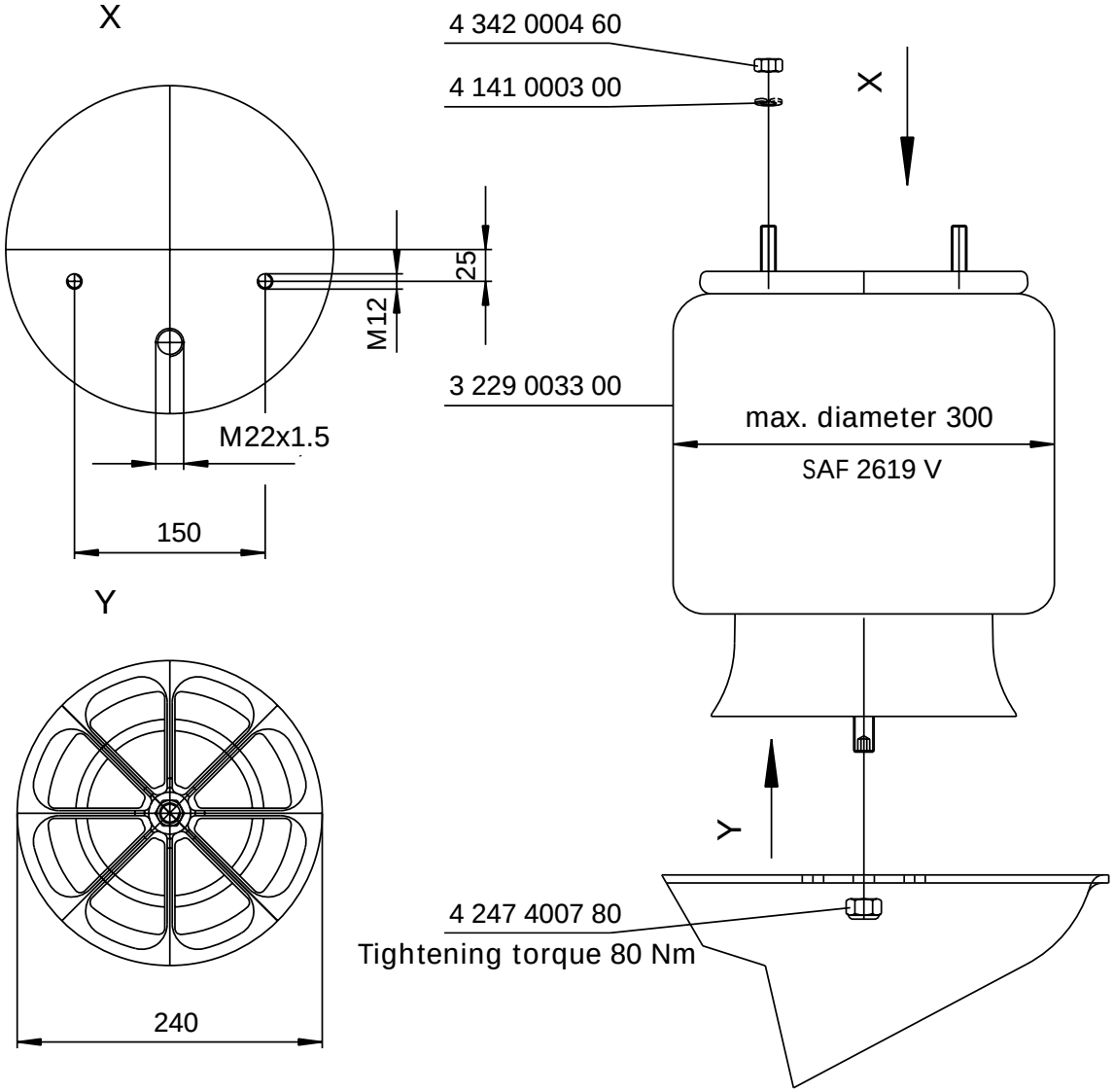

Designation	Drawing No.	Format	Material	Dimensions	Quantity
Air bag	3 229 0033 00	3		SAF 2619 V	1
Hex. nut	4 342 0004 60		6	DIN 934 M12	2
Spring washer	4 141 0003 00		Spring steel	DIN 128 A12	2
Lock nut	4 247 4007 80		8	DIN 985 M16	1

Air bag code 28

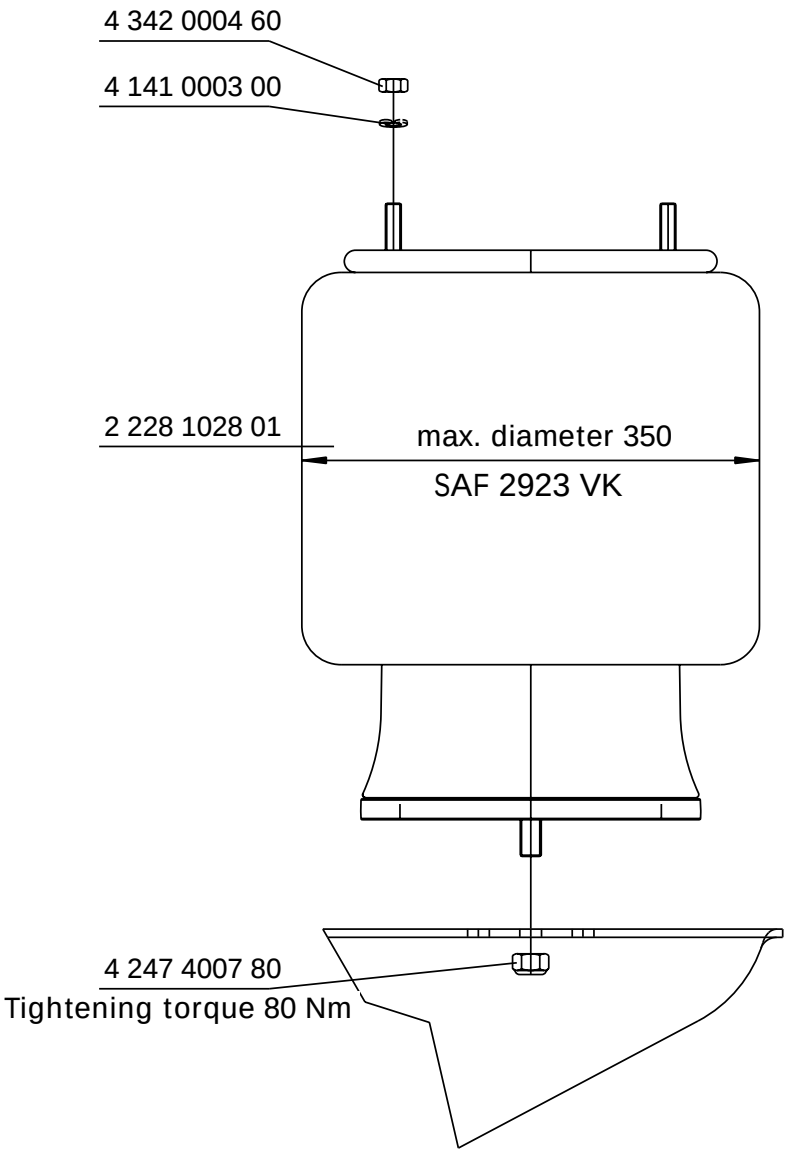

Designation	Drawing No.	Format	Material	Dimensions	Quantity
Air bag parts group	2 228 1028 01	4		SAF 2923 VK with 1 043 0351 00	1
Hex. nut	4 342 0004 60		6	DIN 934 M12	2
Spring washer	4 141 0003 00		Spring steel	DIN 128 A12	2
Lock nut	4 247 4007 80		8	DIN 985 M16	1

Ref. No.: Luftfederteile-Gruppe 3 228 1028 01

Air bag code 28

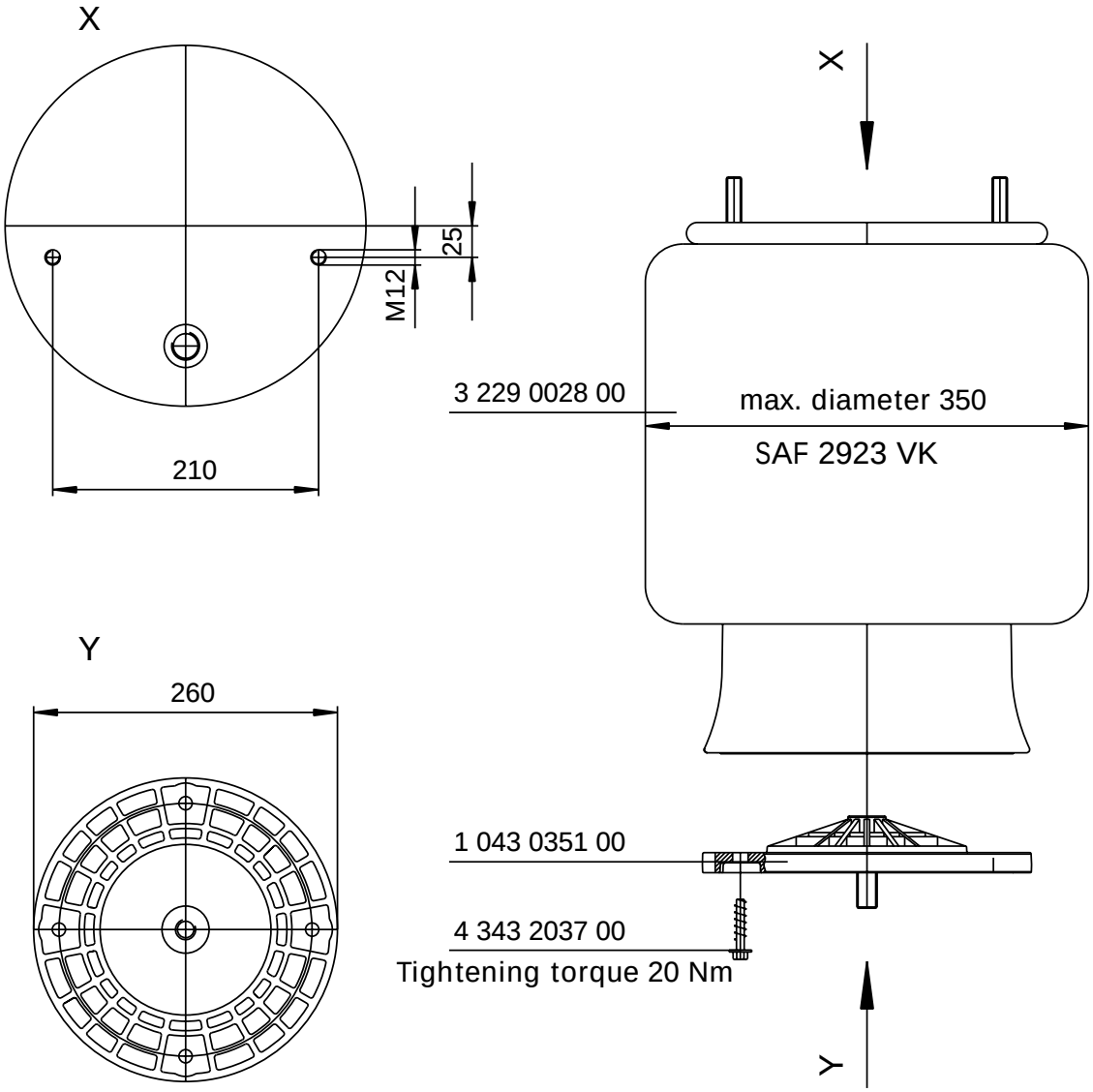

Designation	Drawing No.	Format	Material	Dimensions	Quantity
Air bag	3 229 0028 00	3		SAF 2923 VK	1
Mounting plate	1 043 0351 00	2	PA 6.6 GF30	D 260	1
Self-cutting screw	4 343 2037 00	4	8,8	WN 1447 K 100x40	4

Ref. No.: Luftfederbalgteile-Gruppe 2 228 1028 01

Air bag code 27

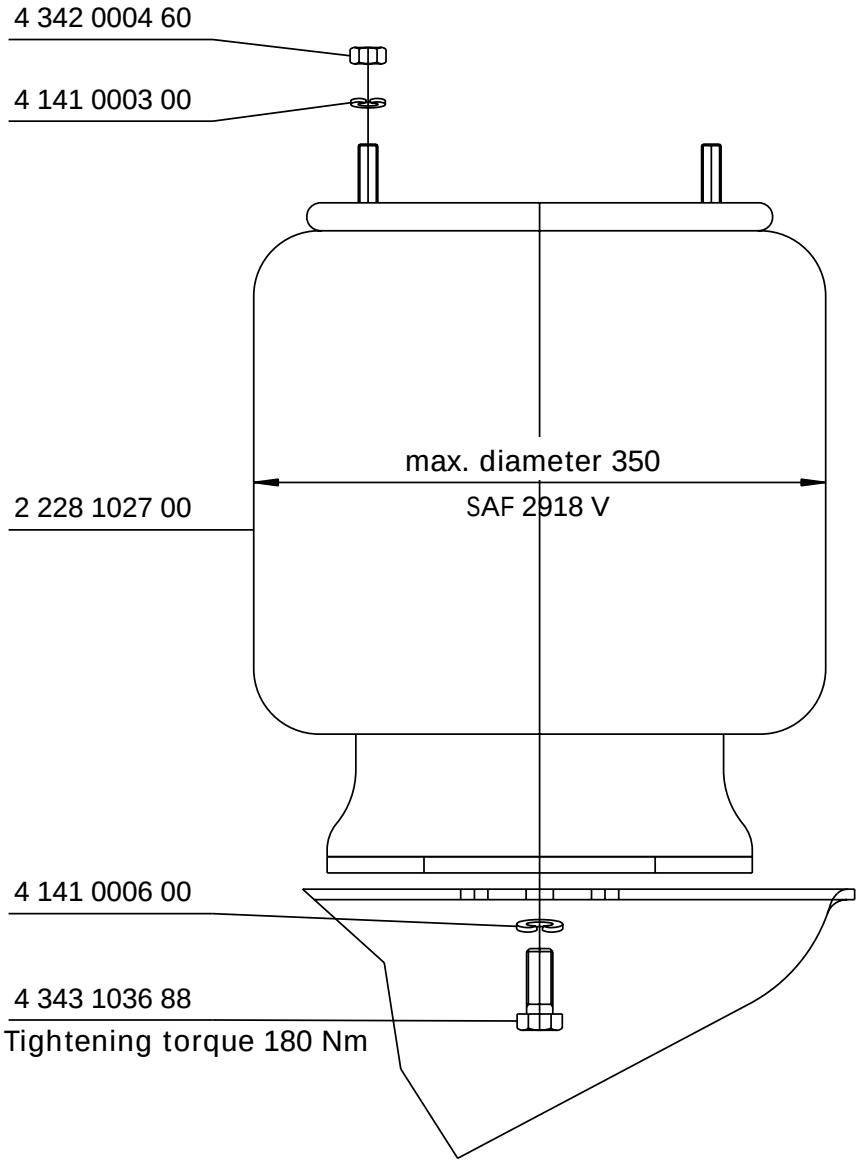

Designation	Drawing No.	Format	Material	Dimensions	Quantity
Air bag	2 228 1027 00	4		SAF 2918 V with 2 043 0306 00	1
Hex. nut	4 342 0004 60		6	DIN 934 M12	2
Spring washer	4 141 0003 00		Spring steel	DIN 128 A12	2
Spring washer	4 141 0006 00		Spring steel	DIN 128 A16	1
Hexagon head bolt	4 343 1036 88		8,8	DIN 933 M16x40	1

Ref. No.: Luftfederteile-Gruppe 3 228 1027 00

Air bag code 27

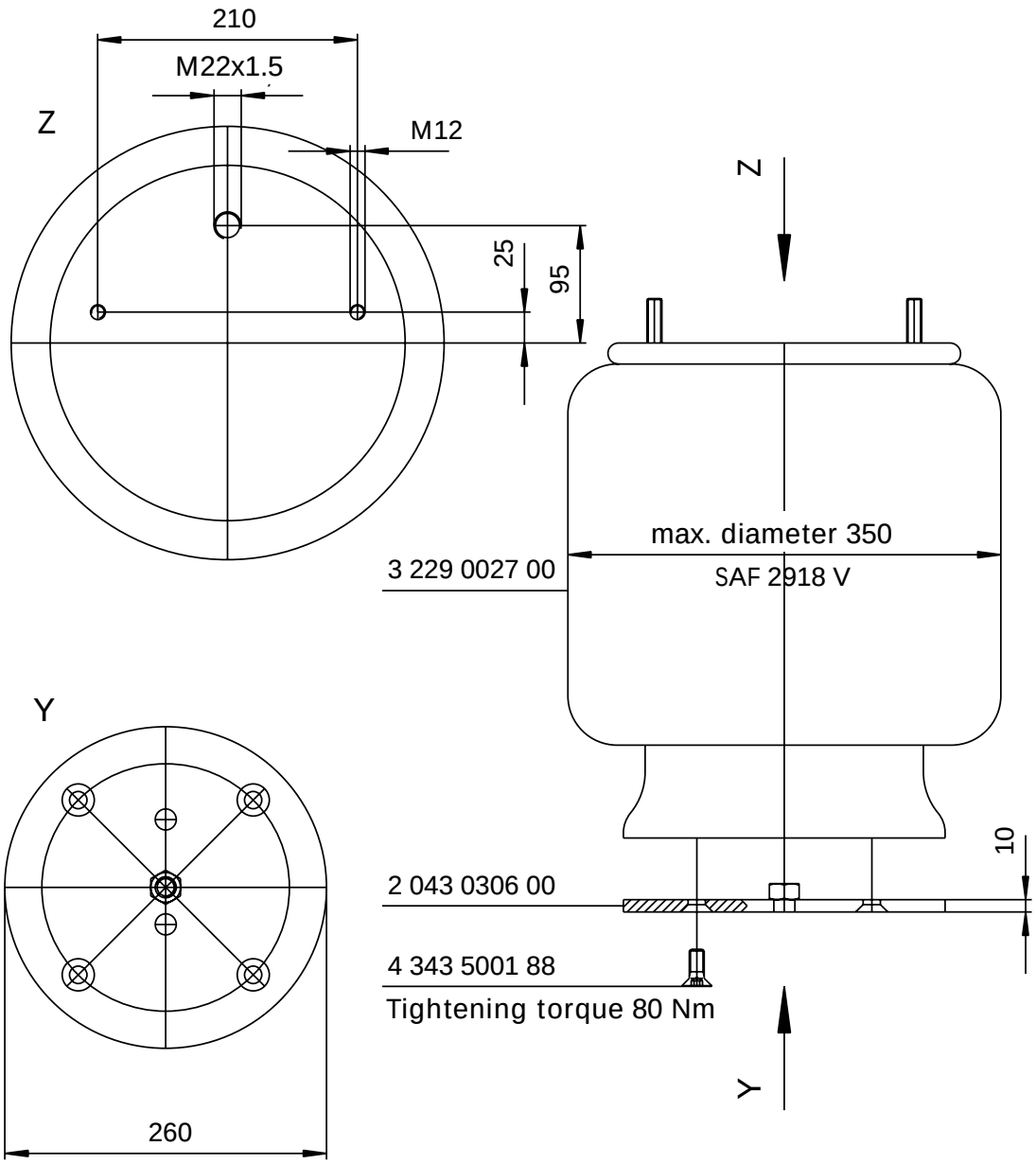

Designation	Drawing No.	Format	Material	Dimensions	Quantity
Air bag	3 229 0027 00	3		SAF 2918 V	1
Mounting plate assembly	2 043 0306 00	4			1
Countersunk head screw	4 343 5001 88		8,8	DIN 933 M12x30	4

Ref. No.: Luftfederbalgteile-Gruppe 2 228 1027 00

Air bag code 31

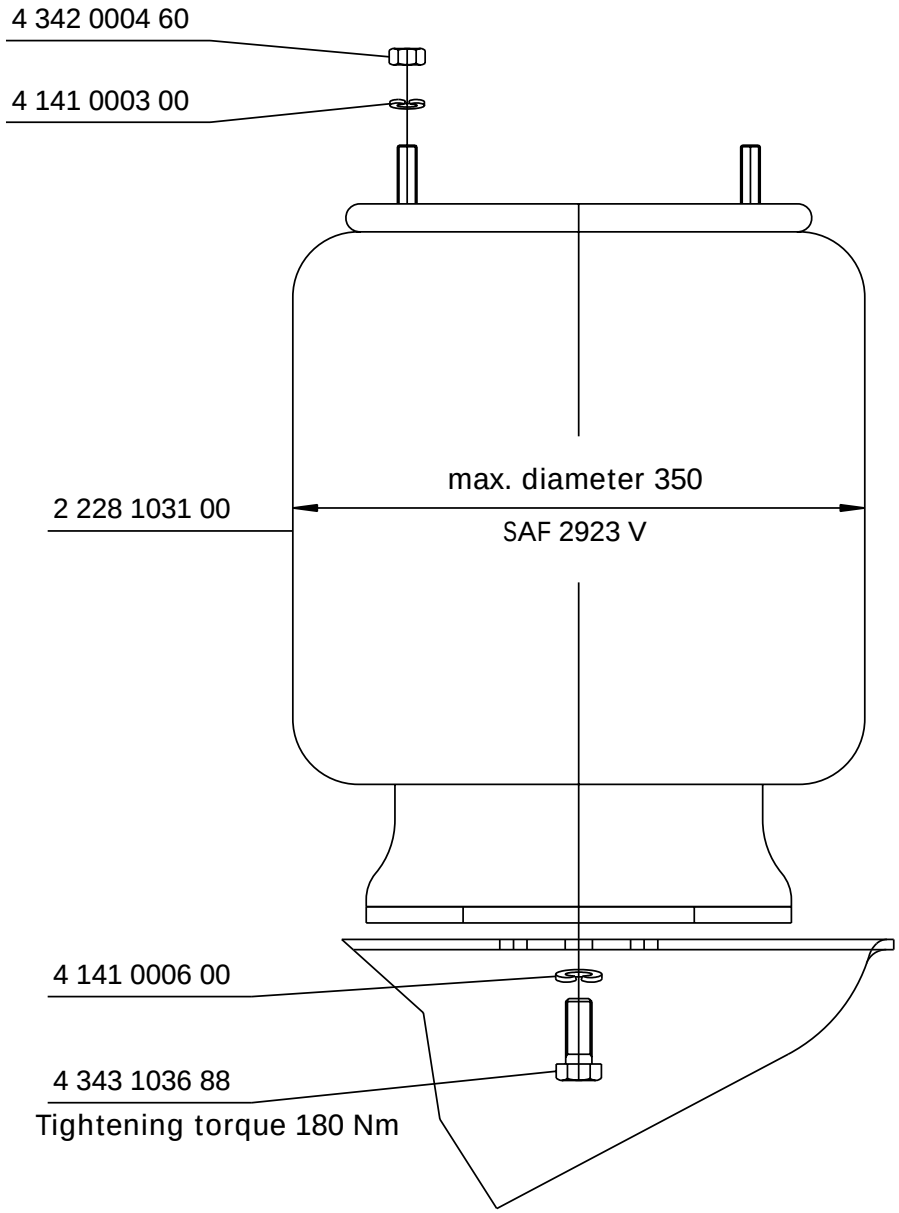

Designation	Drawing No.	Format	Material	Dimensions	Quantity
Air bag	2 228 1031 00	3		SAF 2923 V with 2 043 0306 00	1
Hex. nut	4 342 0004 60		6	DIN 934 M12	2
Spring washer	4 141 0003 00		Spring steel	DIN 128 A12	2
Spring washer	4 141 0006 00		Spring steel	DIN 128 A16	1
Hexagon head bolt	4 343 1036 88		8,8	DIN 933 M16x40	1

Ref. No.: Luftfederteile-Gruppe 3 228 1031 00

Air bag code 31

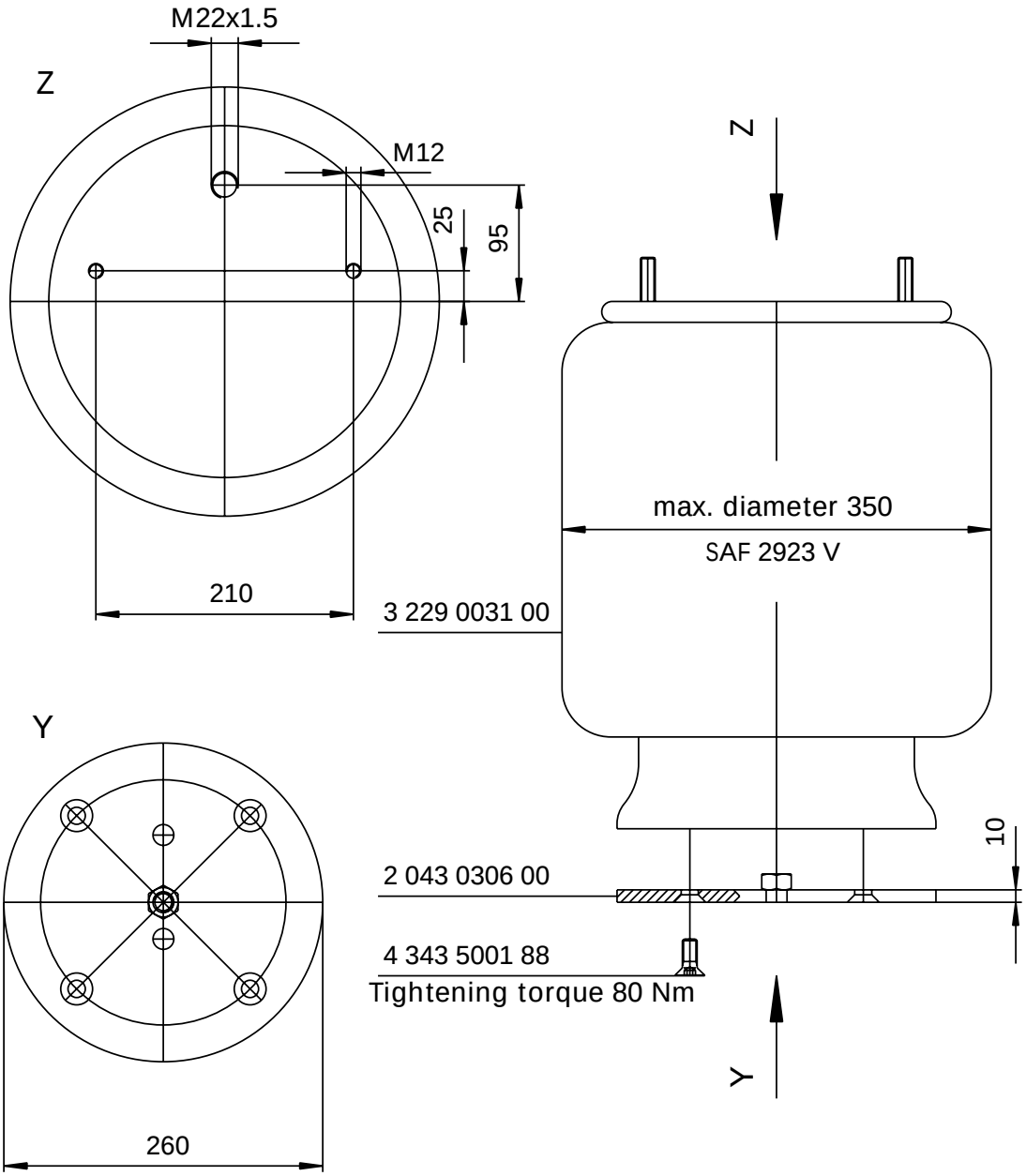

Designation	Drawing No.	Format	Material	Dimensions	Quantity
Air bag	3 229 0031 00	3		SAF 2923 V	1
Mounting plate assembly	2 043 0306 00	4			1
Countersunk head screw	4 343 5001 88		8,8	DIN 933 M12x30	4

Ref. No.: Luftfederbalgteile-Gruppe 2 228 1031 00

Hanger Brackets and Crossmembers

Functional suspension arm bearing, adjustable, for INTRADISC *plus*

Hanger brackets/crossmembers (steel)

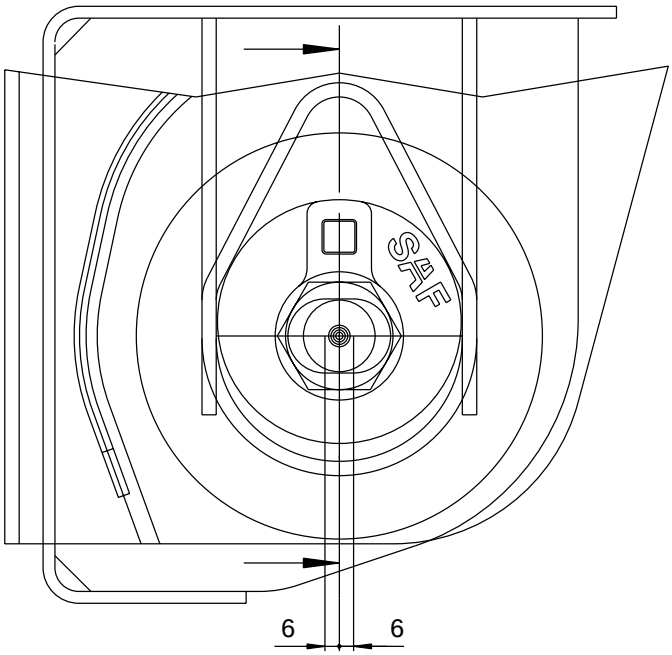

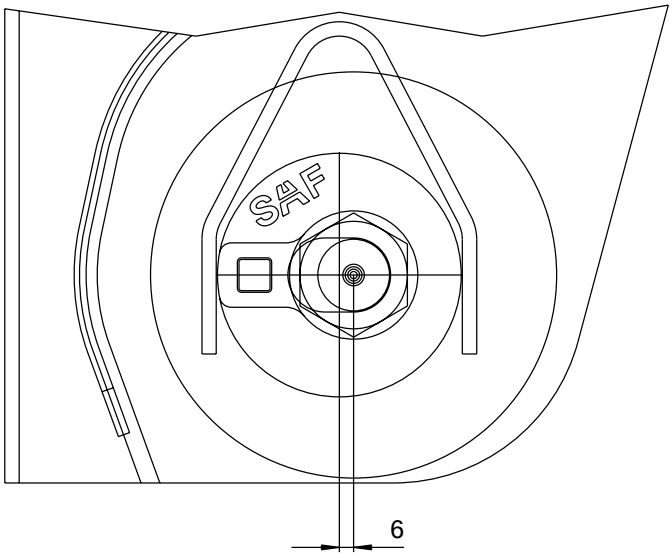

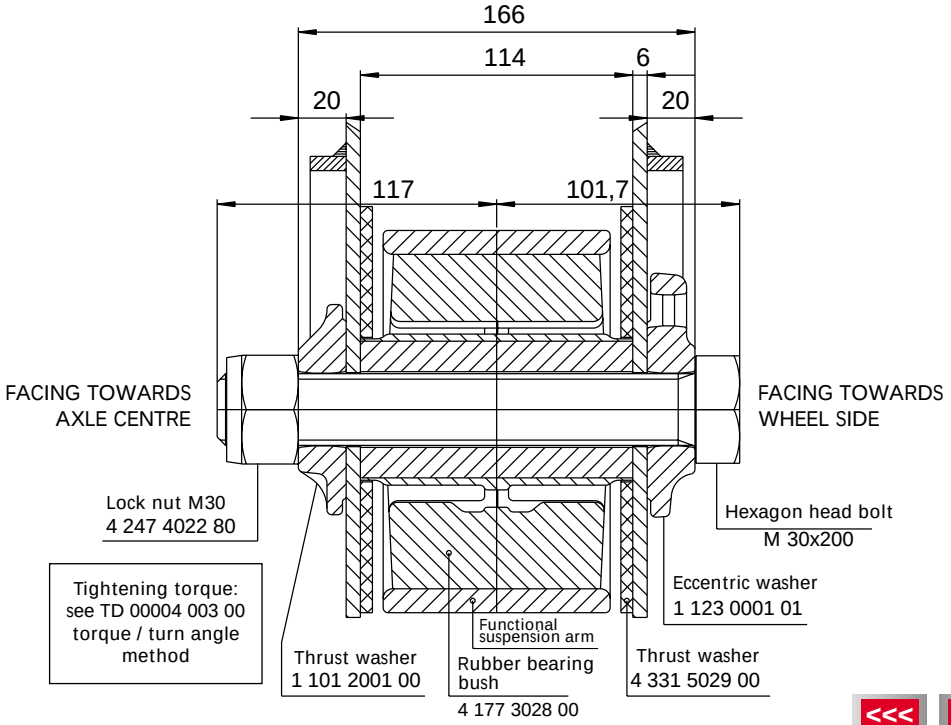

Ref. No.: 3 143 1010 00 A

Functional suspension arm bearing, adjustable for INTRADISC *plus*

Hanger brackets (aluminium)

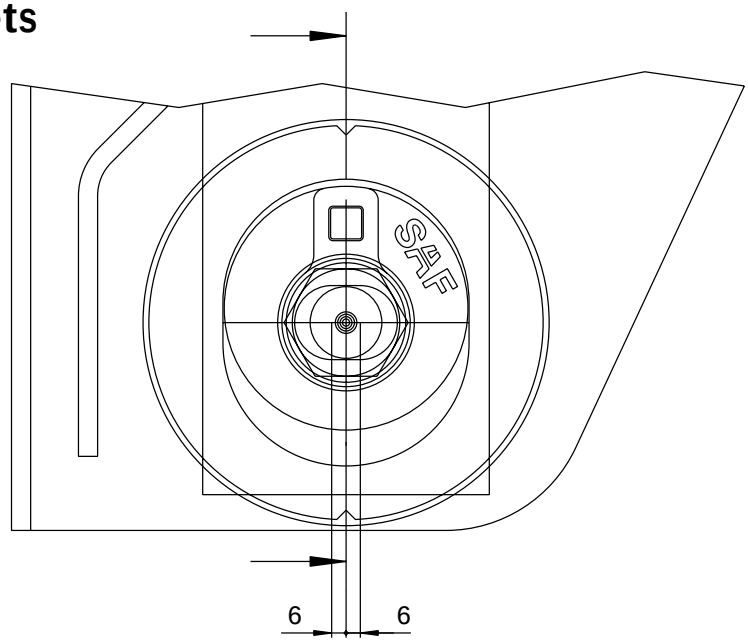

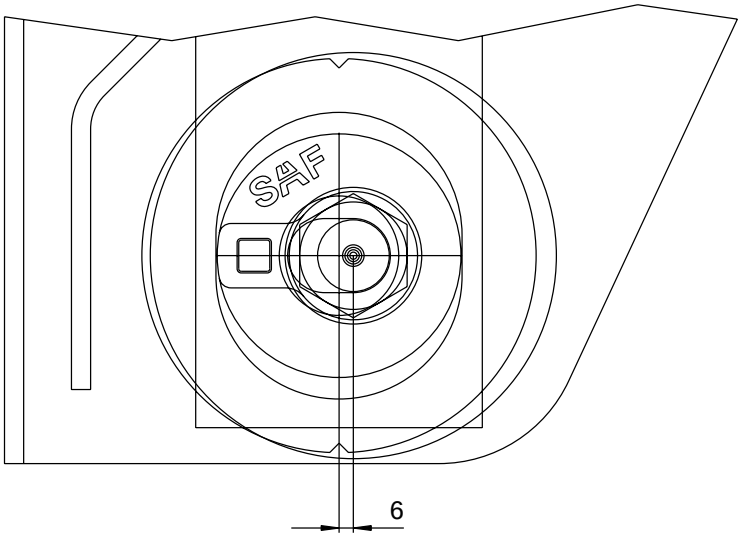

Caution!
Mounting bolt not maintenance-free!

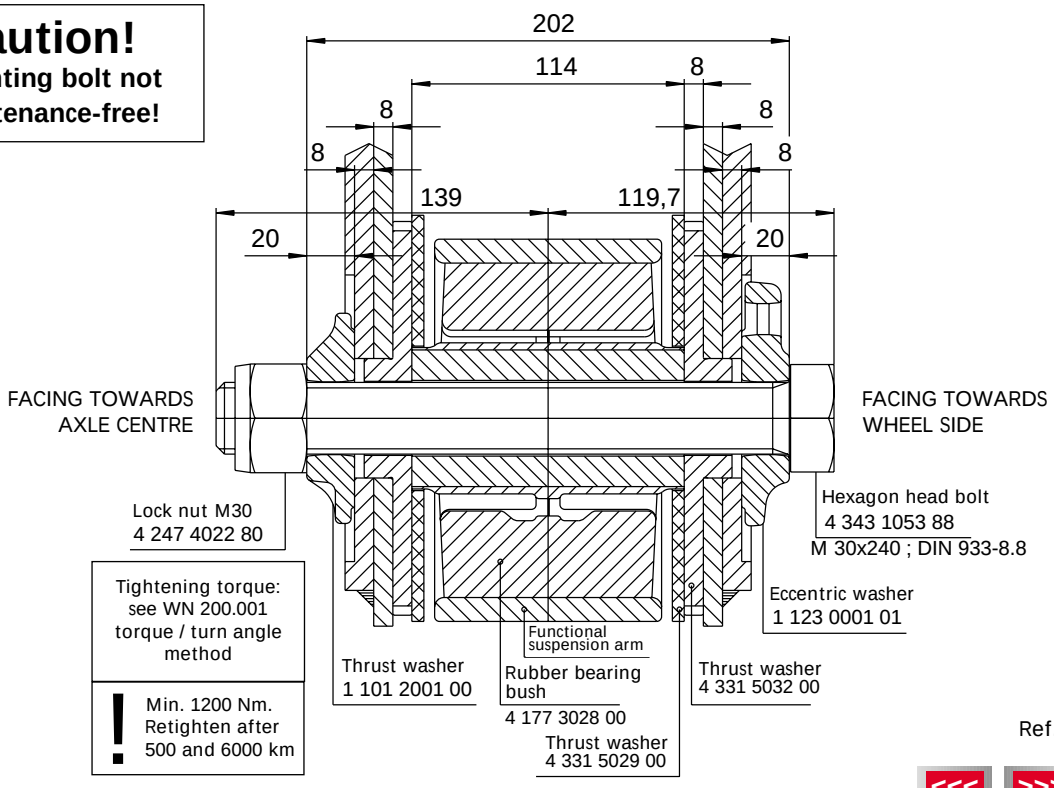

Tightening torque: see WN 200.001 torque / turn angle method

! Min. 1200 Nm. Retighten after 500 and 6000 km

Ref. No.: 3 143 1011 00 A

INTRA hanger bracket – Information

- **90 mm hanger bracket width (frame connection width)**
- **Symmetrical hanger brackets (no left and right version)**
- **Shock absorber position in hanger bracket (shock absorber centre = bracket centre)**

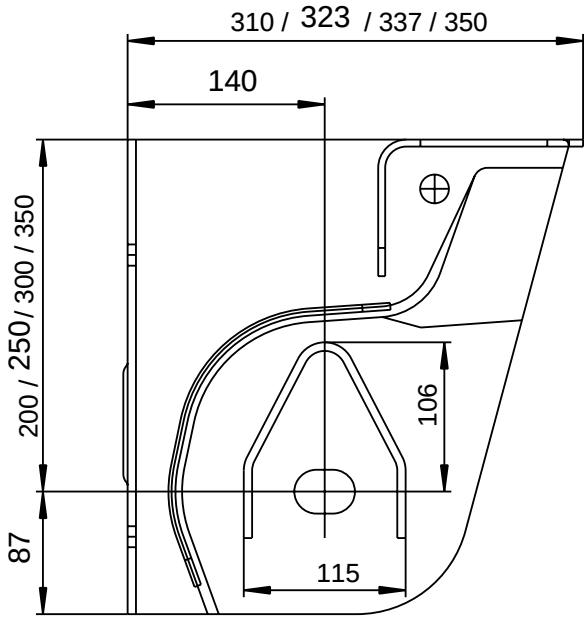

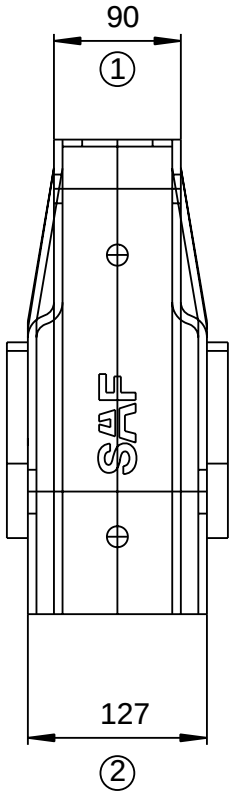

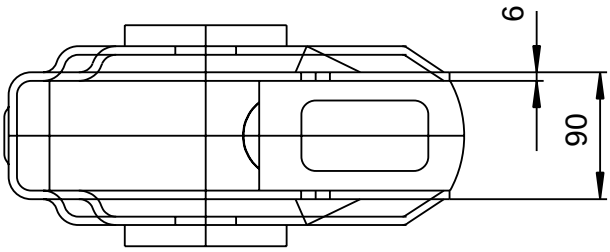

Hanger bracket side view

Recommended welding zone for hanger bracket reinforcement

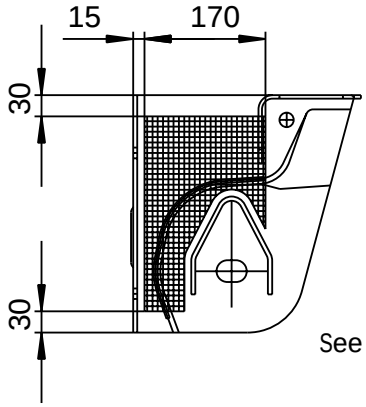

See SAF reinforcement suggestions

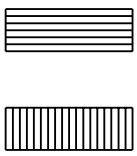

1 In area of bracket width 90 mm

2 In area of bracket width 127 mm

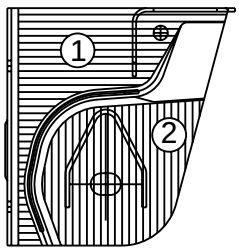

Ref. No.: INFOHALTEBOCKINTRA

Aluminium hanger bracket assembly IU / IO series – 200 high

Adjustable functional suspension arm bearing

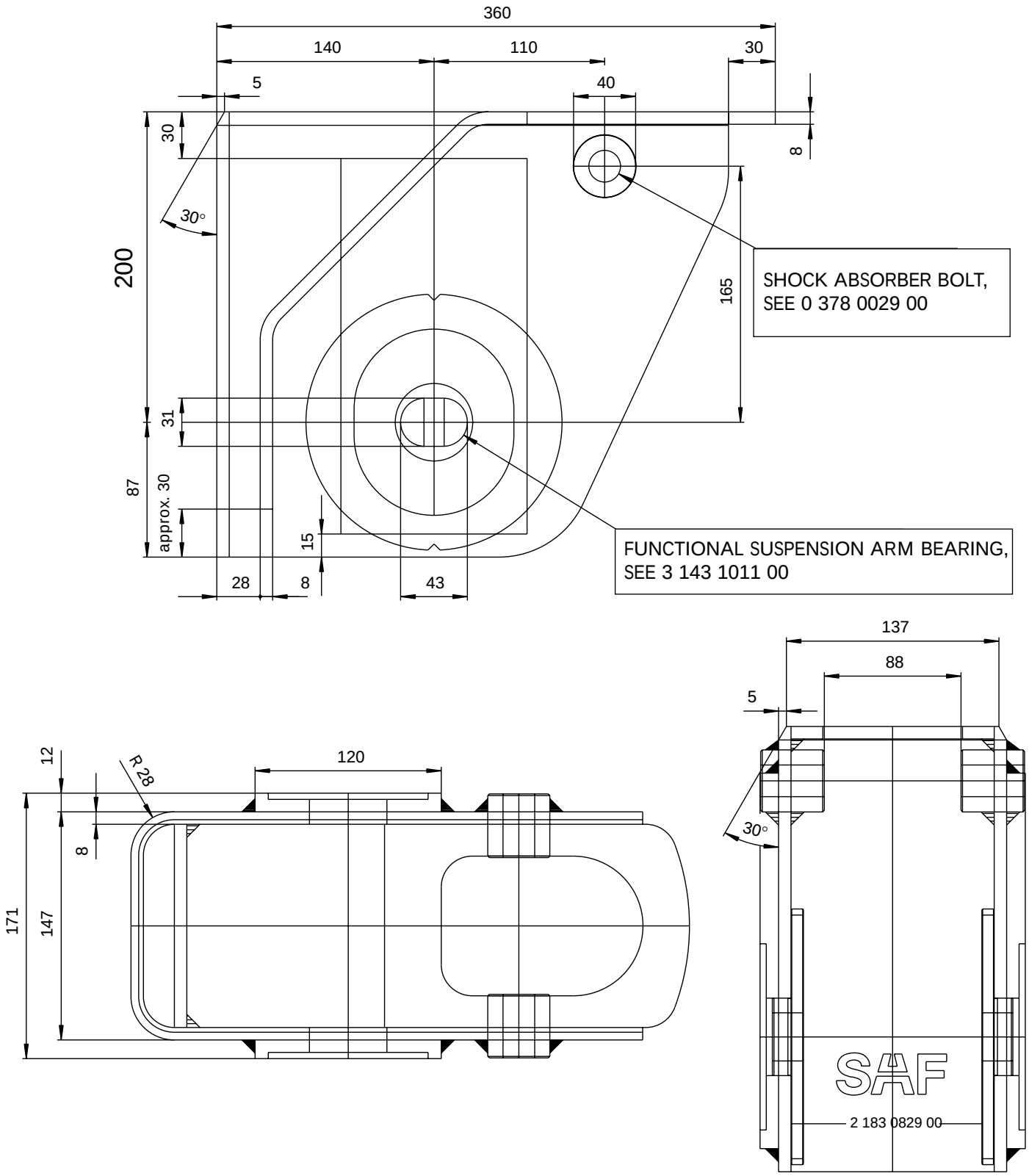

Ref. No.: 2 183 0829 00 INFO

Aluminium hanger bracket assembly IU / IO series – 250 high

Adjustable functional suspension arm bearing

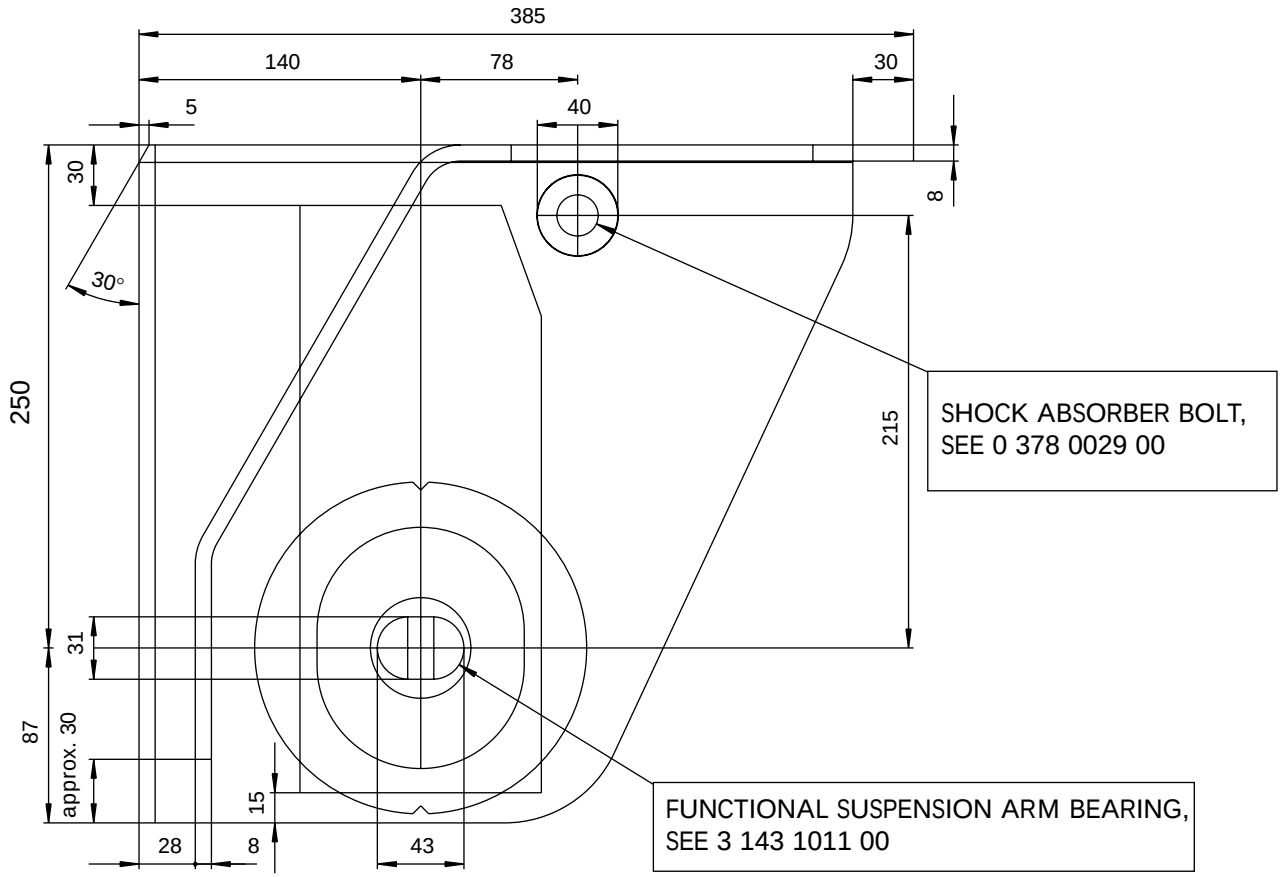

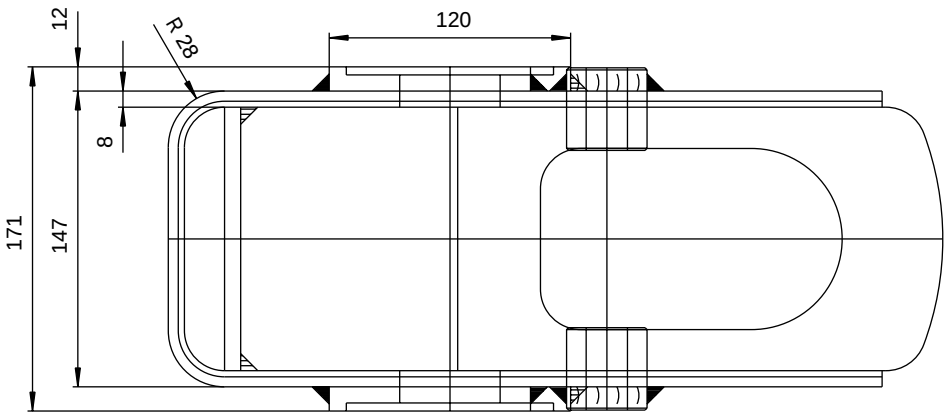

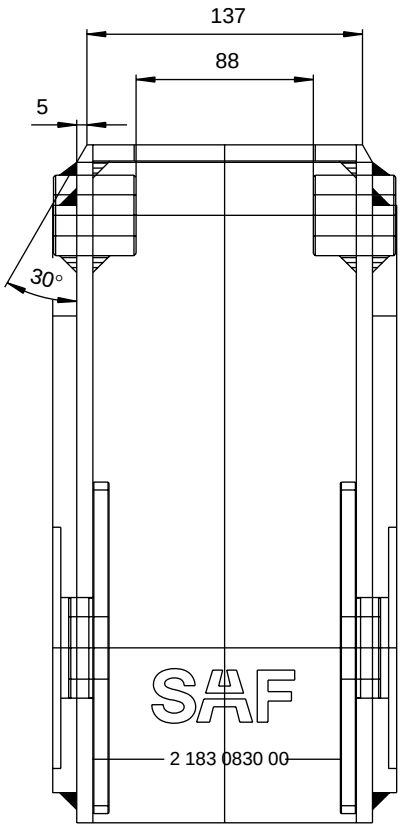

Ref. No.: 2 183 0830 00 INFO

Aluminium hanger bracket assembly
IU / IO series – 300 high

Adjustable functional suspension arm bearing

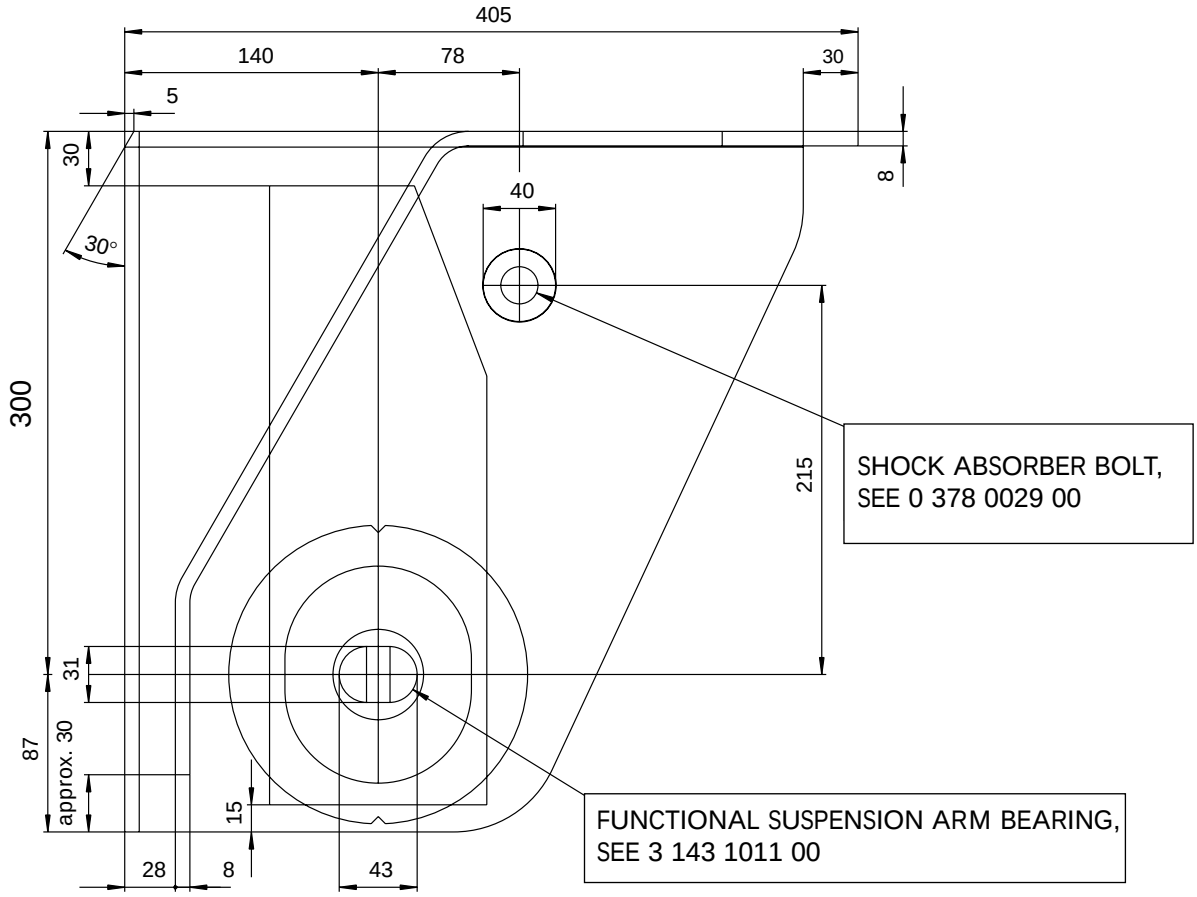

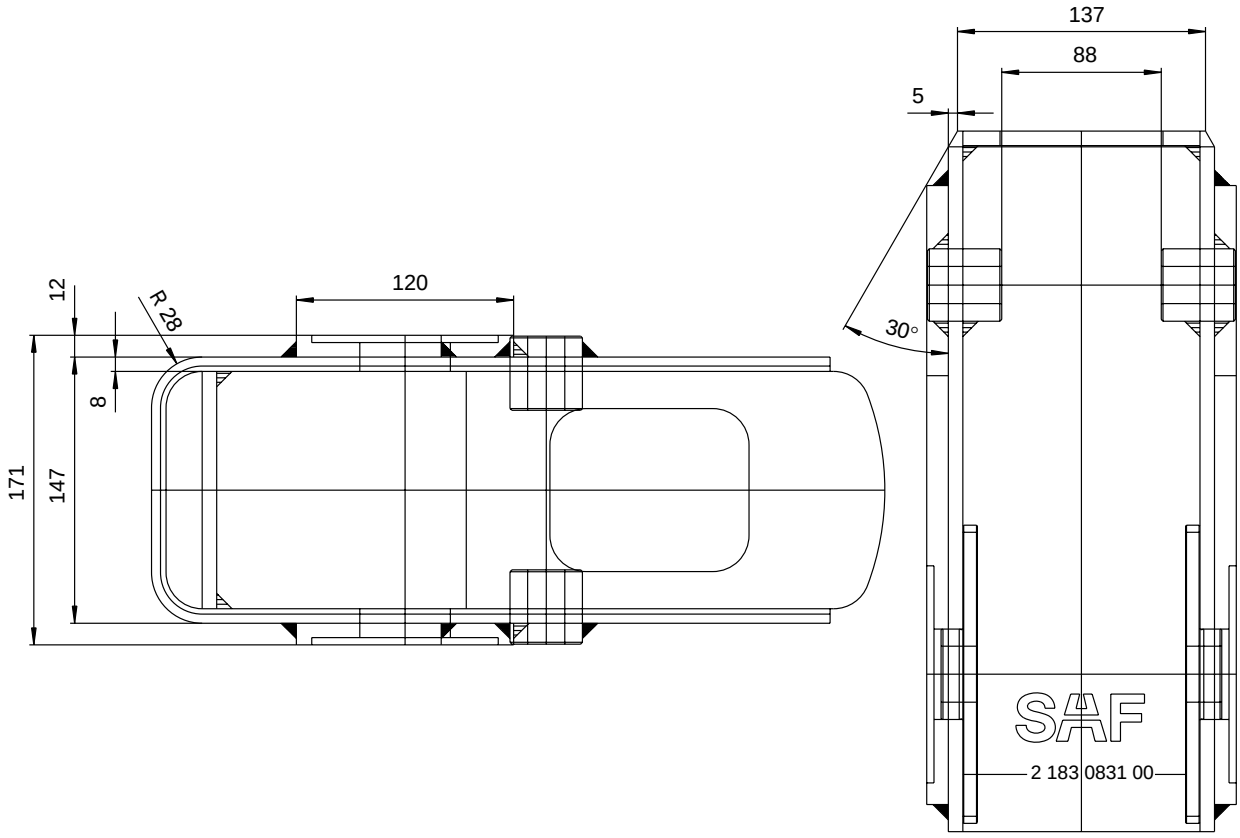

Ref. No.: 2 183 0831 00 INFO

Aluminium hanger bracket assembly
IU / IO series – 350 high

Adjustable functional suspension arm bearing

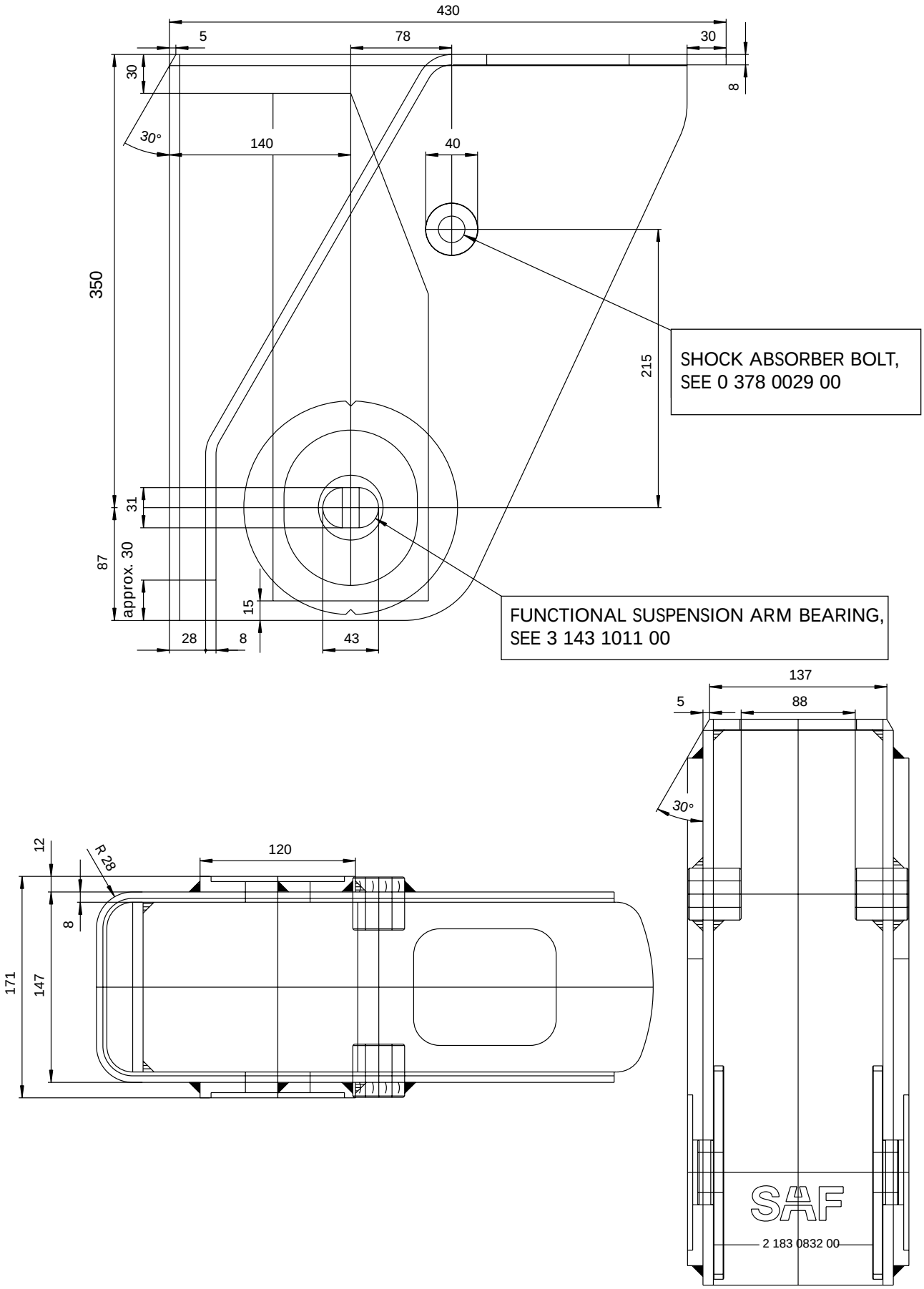

Ref. No.: 2 183 0832 00 INFO

Crossmember
IU / IO series – 200 high

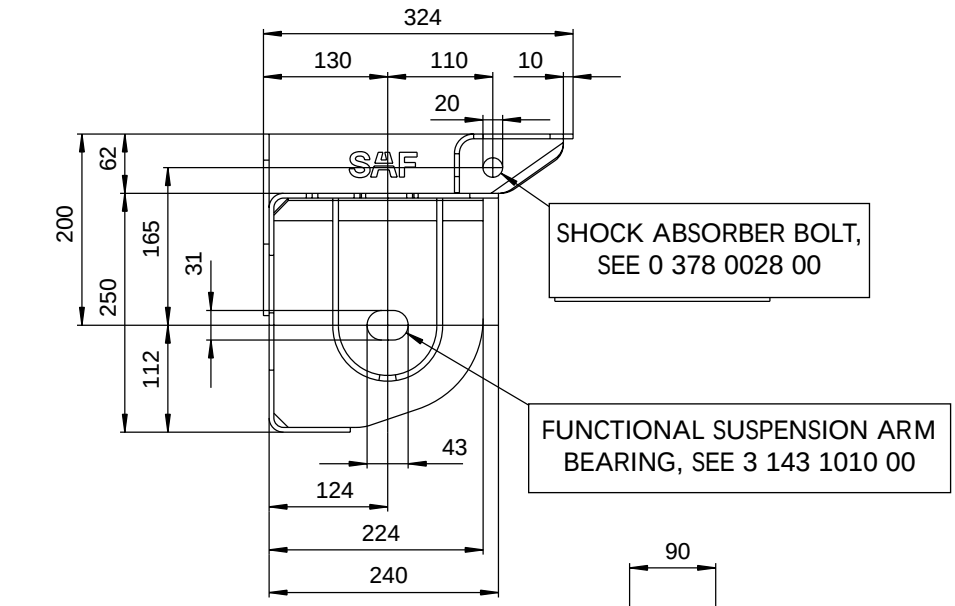

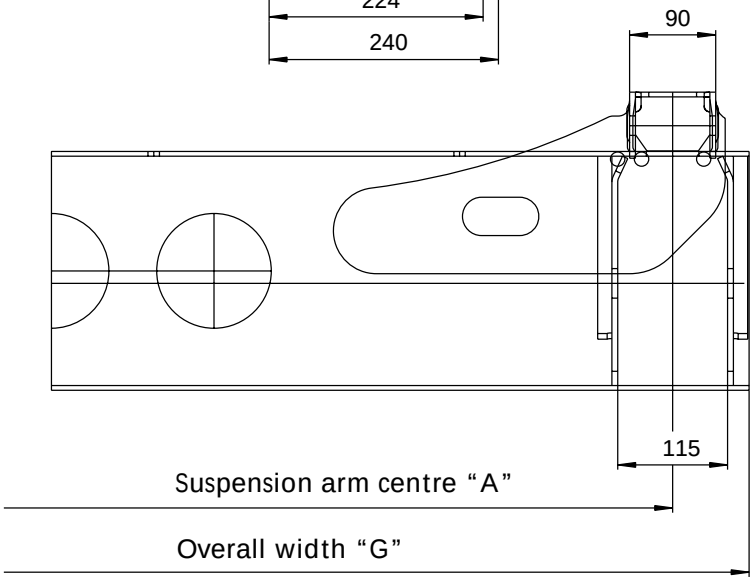

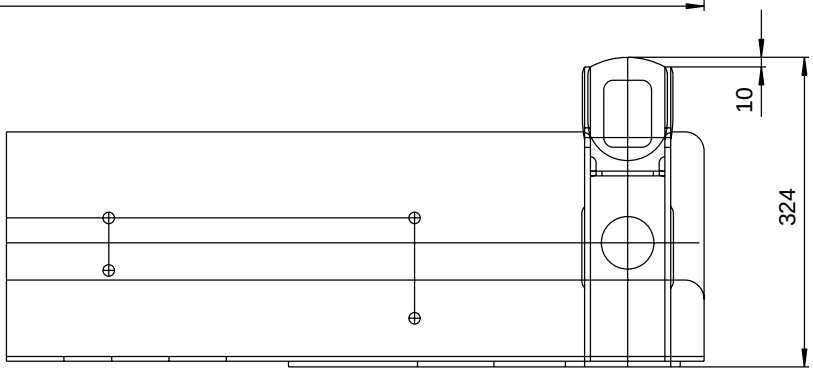

HANGER BRACKET WELDED TO FRAME, WELD SEAM 5 mm ◺

NO TACK WELDS, NO START OF WELD

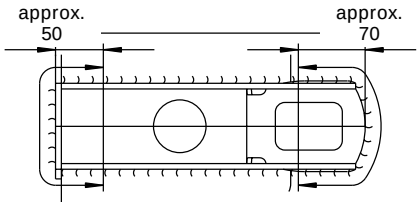

UNDERCUTS AND END CRATERS ARE NOT ADMISSIBLE

1400	1560	2 291 0427 00	
1200	1360	2 291 0426 00	
1300	1460	2 291 0400 00	
“A”	“G”	Drawing No.	Date/ Name

Ref. No.: 6 291 0400 00 INFO

Crossmember
IU / IO series – 250 high

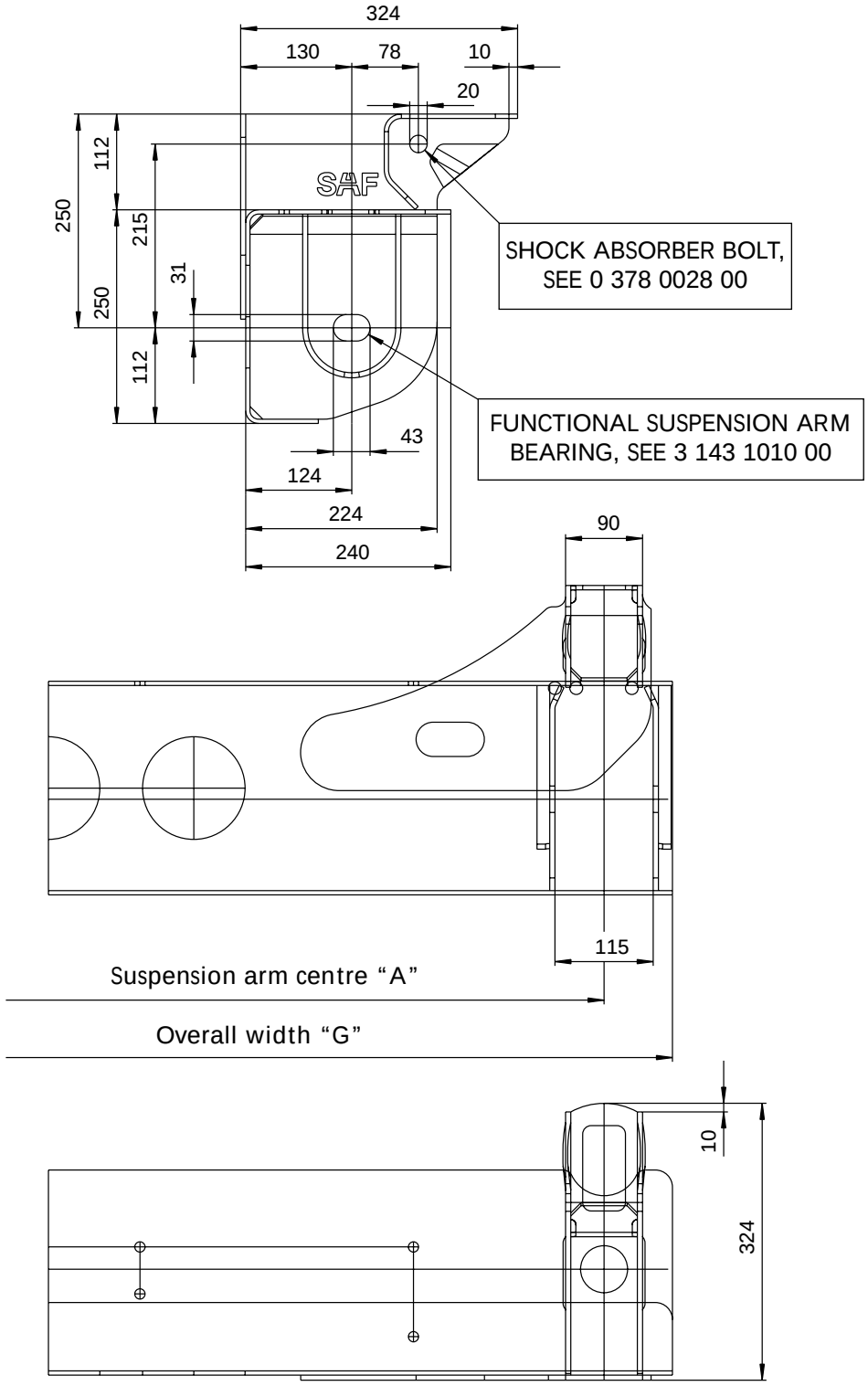

HANGER BRACKET WELDED TO FRAME, WELD SEAM 5 mm ◺

NO TACK WELDS, NO START OF WELD

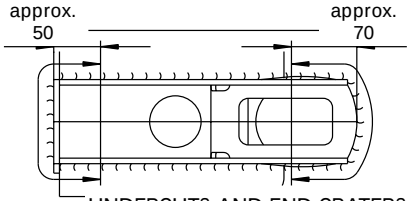

UNDERCUTS AND END CRATERS ARE NOT ADMISSIBLE

1400	1560	2 291 0424 00	
1200	1360	2 291 0423 00	
1300	1460	2 291 0401 00	
“A”	“G”	Drawing No.	Date/ Name

Ref. No.: 6 291 0401 00 INFO

Crossmember
IU / IO series – 300 high

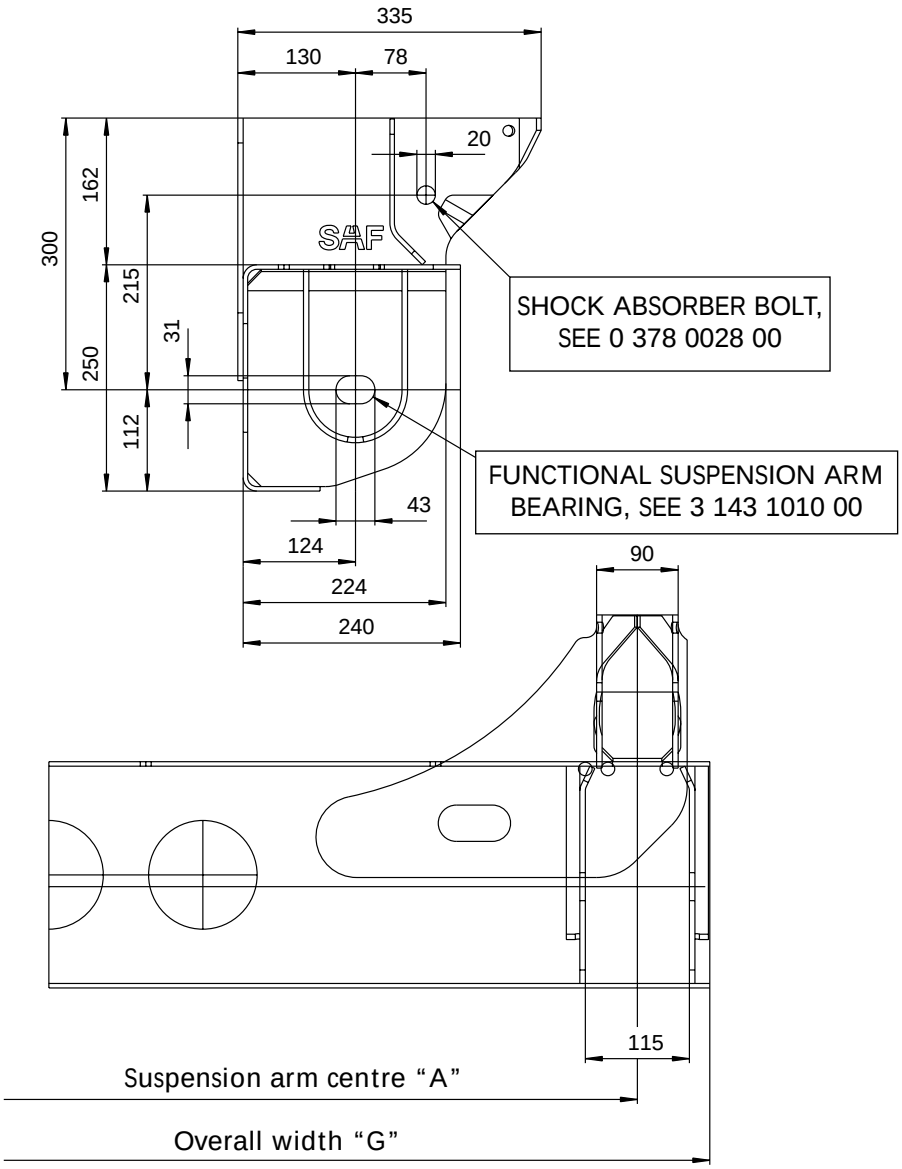

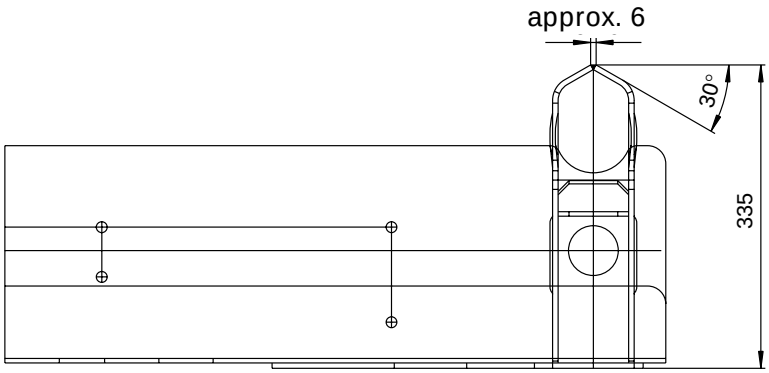

HANGER BRACKET WELDED TO FRAME, WELD SEAM 5 mm ◺

NO TACK WELDS, NO START OF WELD

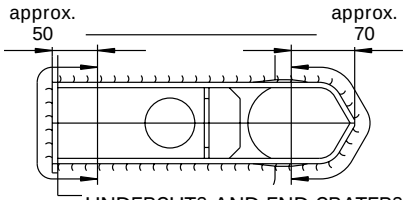

UNDERCUTS AND END CRATERS ARE NOT ADMISSIBLE

1200	1360	2 291 0428 00	
1400	1560	2 291 0421 00	
1300	1460	2 291 0402 00	
“A”	“G”	Drawing No.	Date/ Name

Ref. No.: 6 291 0402 00 INFO

Design for pavers on the rear axle (optional)

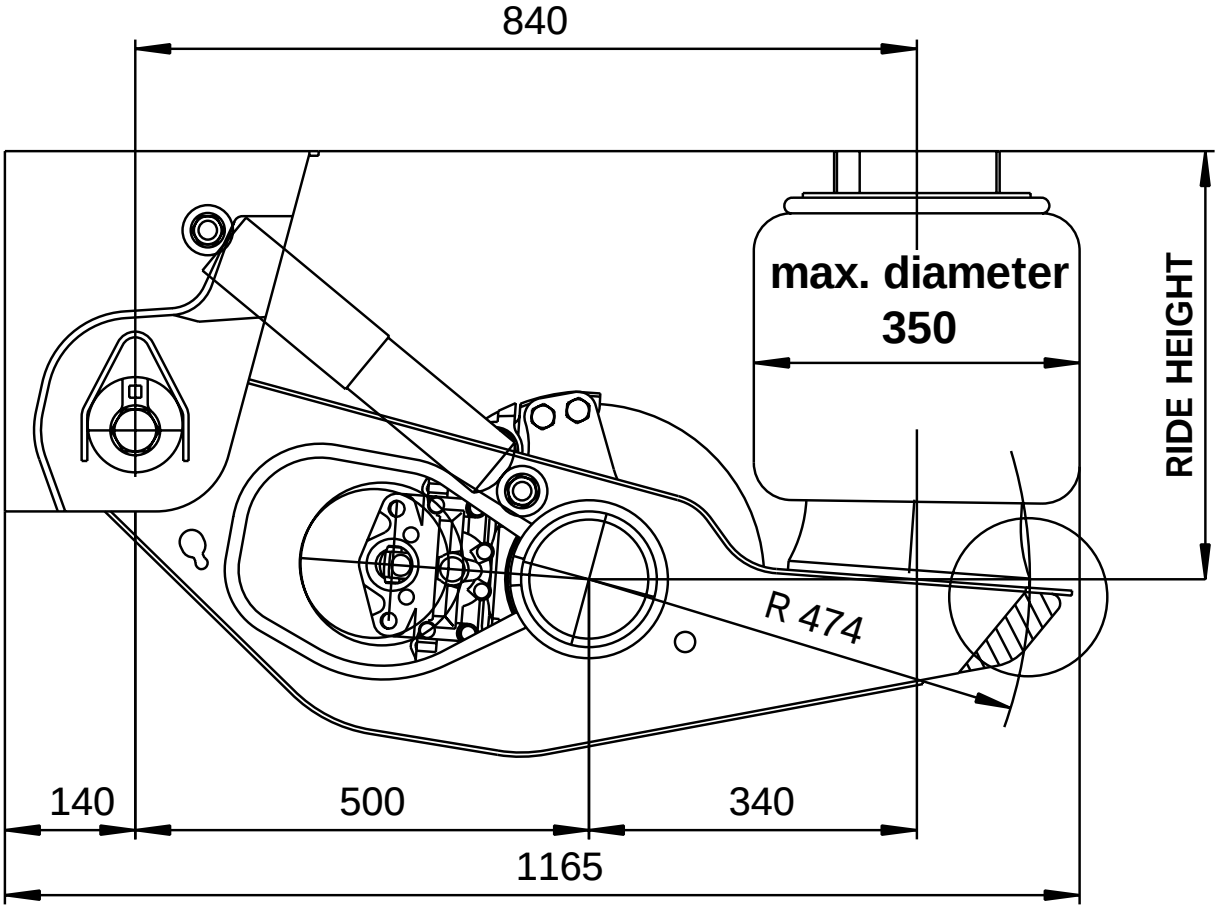

Recommendation for tipper:

Air bags with steel plunger
Air bag diameter 350 mm

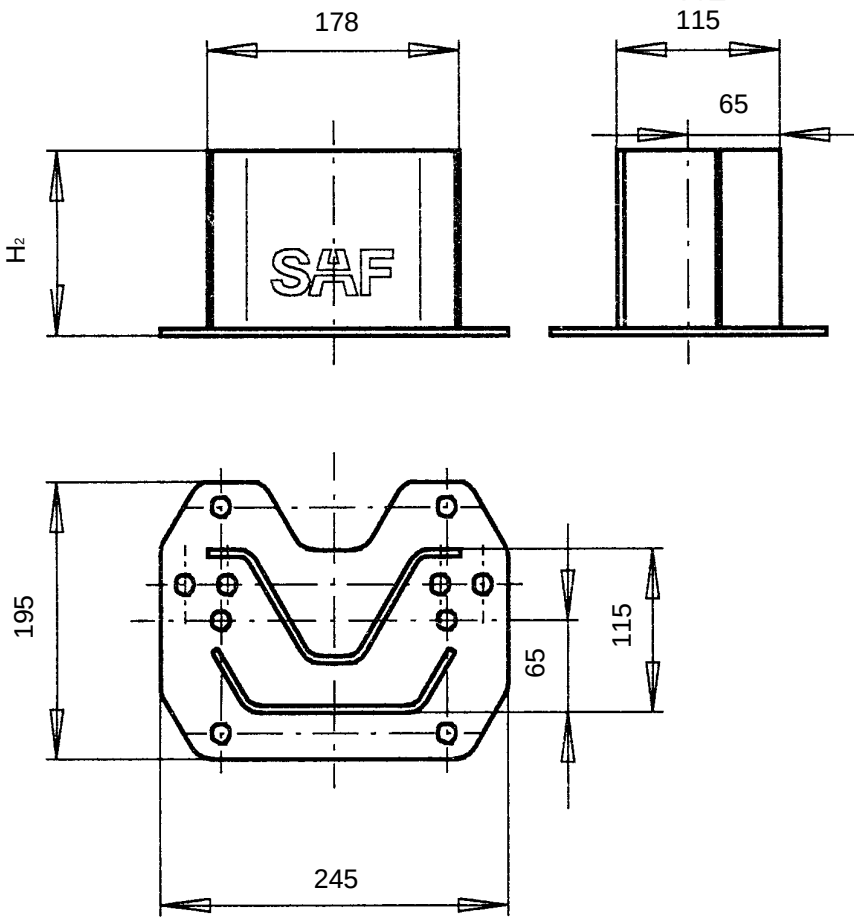

Designation / Remark	H_2 (mm)	Order No.
Air suspension brackets „steel“	50	2 237 0081 01
	100	2 237 0080 01
	150	2 237 0082 01

Shock Absorbers

INTRADISC *plus*
Shock absorber ride heights

Series / Standard	Ride height	Hanger bracket height	Air suspension bracket	Lift / Lower	Shock absorber up to 3.4.2001	Current Shock absorber
IU 25/2000 33/27	250	200	0	90 / 90	2 376 0070 00	2 376 0070 01
IU 28/2005 33/27	280	200	50	90 / 90	2 376 0070 00	2 376 0070 01
IU 30/2505 33/27	300	250	50	90 / 90	2 376 0071 00	2 376 0071 01
IU 33/2510 33/27	330	250	100	90 / 90	2 376 0071 00	2 376 0071 01
IU 35/3010 33/27	350	300	100	90 / 90	2 376 0071 00	2 376 0071 01
IO 35/2000 33/27	355	200	0	90 / 90	2 376 0071 00	2 376 0071 01
IO 37/2500 33/27	375	250	0	90 / 90	2 376 0071 00	2 376 0071 01
IO 40/2505 33/27	405	250	50	90 / 90	2 376 0071 00	2 376 0072 01
IO 42/3005 33/27	425	300	50	90 / 90	2 376 0071 00	2 376 0071 01
IO 45/3010 33/27	455	300	100	90 / 90	2 376 0071 00	2 376 0072 01
IO 47/3510 33/27	475	350	100	90 / 90	2 376 0071 00	2 376 0071 01
IO 50/3515 33/27	505	350	150	90 / 90	2 376 0071 00	2 376 0072 01
IU 29/2000 28/31	290	200	0	100 / 100	2 376 0070 00	2 376 0070 01
IU 31/2500 28/31	310	250	0	100 / 100	2 376 0071 00	2 376 0071 01
IU 34/2505 28/31	340	250	50	100 / 100	2 376 0071 00	2 376 0071 01
IU 36/3005 28/31	360	300	50	100 / 100	2 376 0071 00	2 376 0071 01
IU 39/3010 28/31	390	300	100	100 / 100	2 376 0071 00	2 376 0071 01
IU 42/3015 28/31	420	300	150	100 / 100	2 376 0071 00	2 376 0072 01
IO 44/3000 28/31	440 (no lift)	300	0	95 / 105	2 376 0072 00	2 376 0072 01
IO 46/3005 28/31	460 (no lift)	300	50	100 / 100	2 376 0072 00	2 376 0072 01
IO 49/3505 28/31	490 (no lift)	350	50	95 / 105	2 376 0072 00	2 376 0072 01

Dimensions in mm

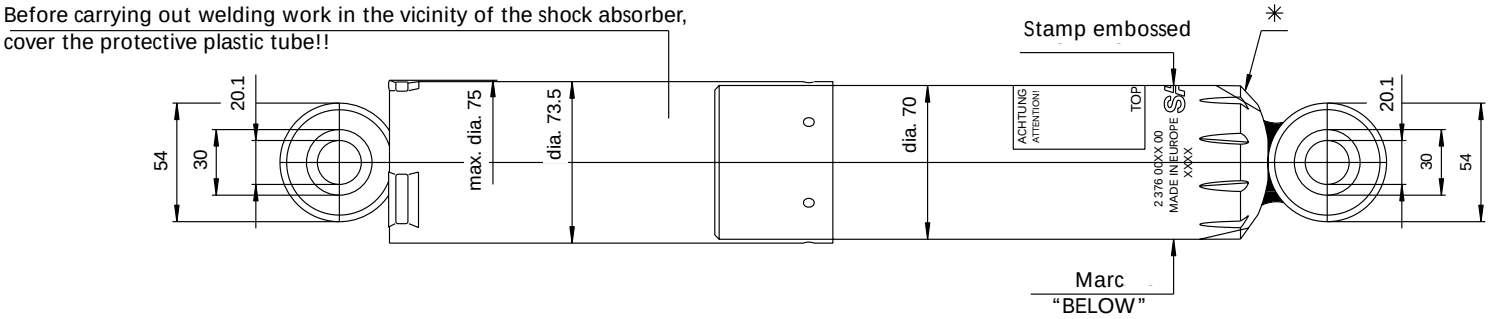

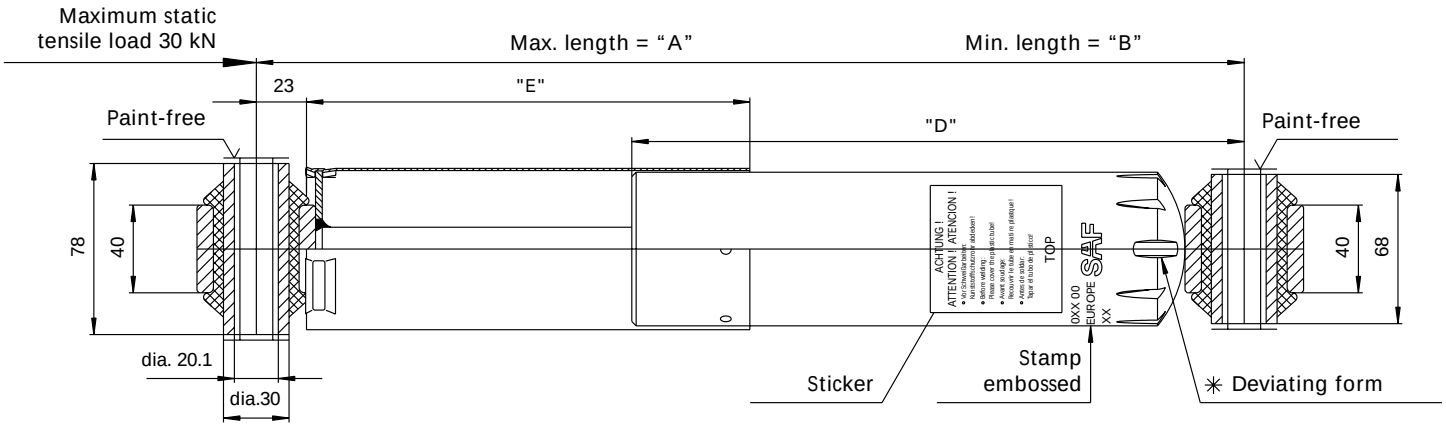

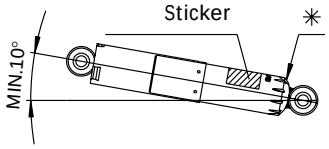

Ident. No.	A	B	Stroke	D	E	F	G
2 376 0070 00	413	278	135	238	---	200	365
2 376 0071 00	491	315	176	279	---	200	450
2 376 0072 00	532	335	197	301	220	---	490

Axle Lifts

INTRA *plus*
Two-side lift for steel hanger bracket

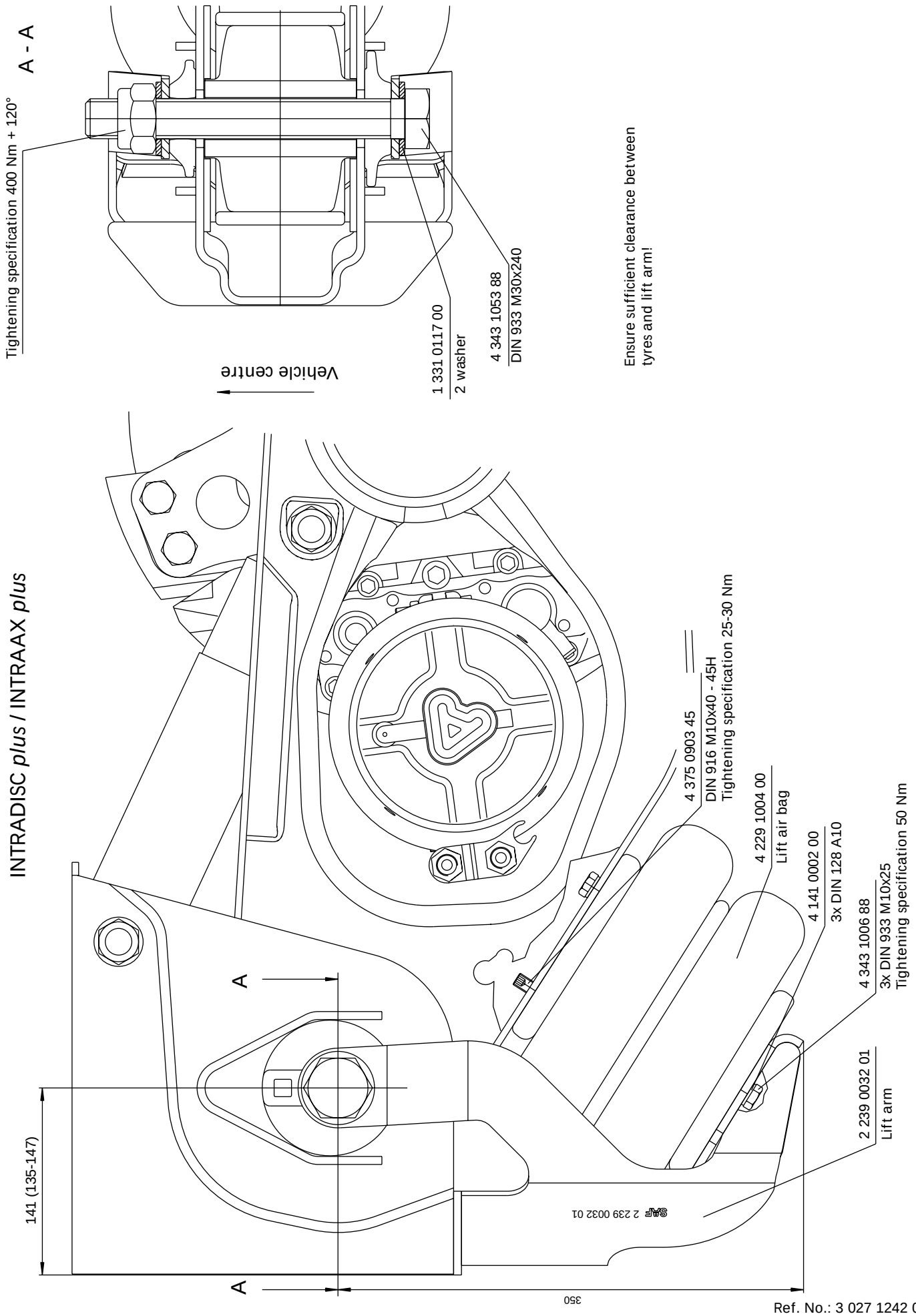

Ref. No.: 3 027 1242 00 A

INTRA *plus*
Two-side lift for crossmember

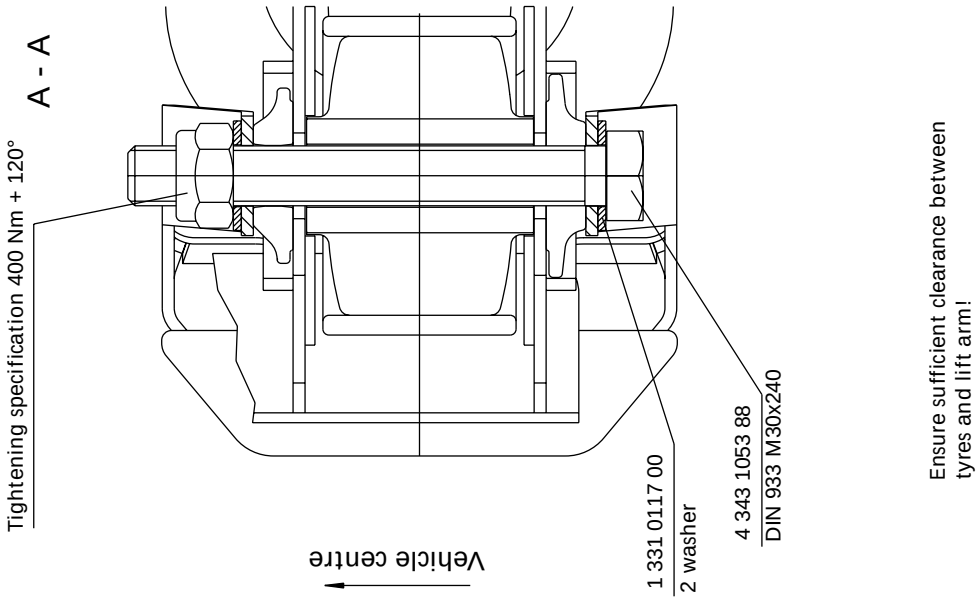

Ensure sufficient clearance between tyres and lift arm!

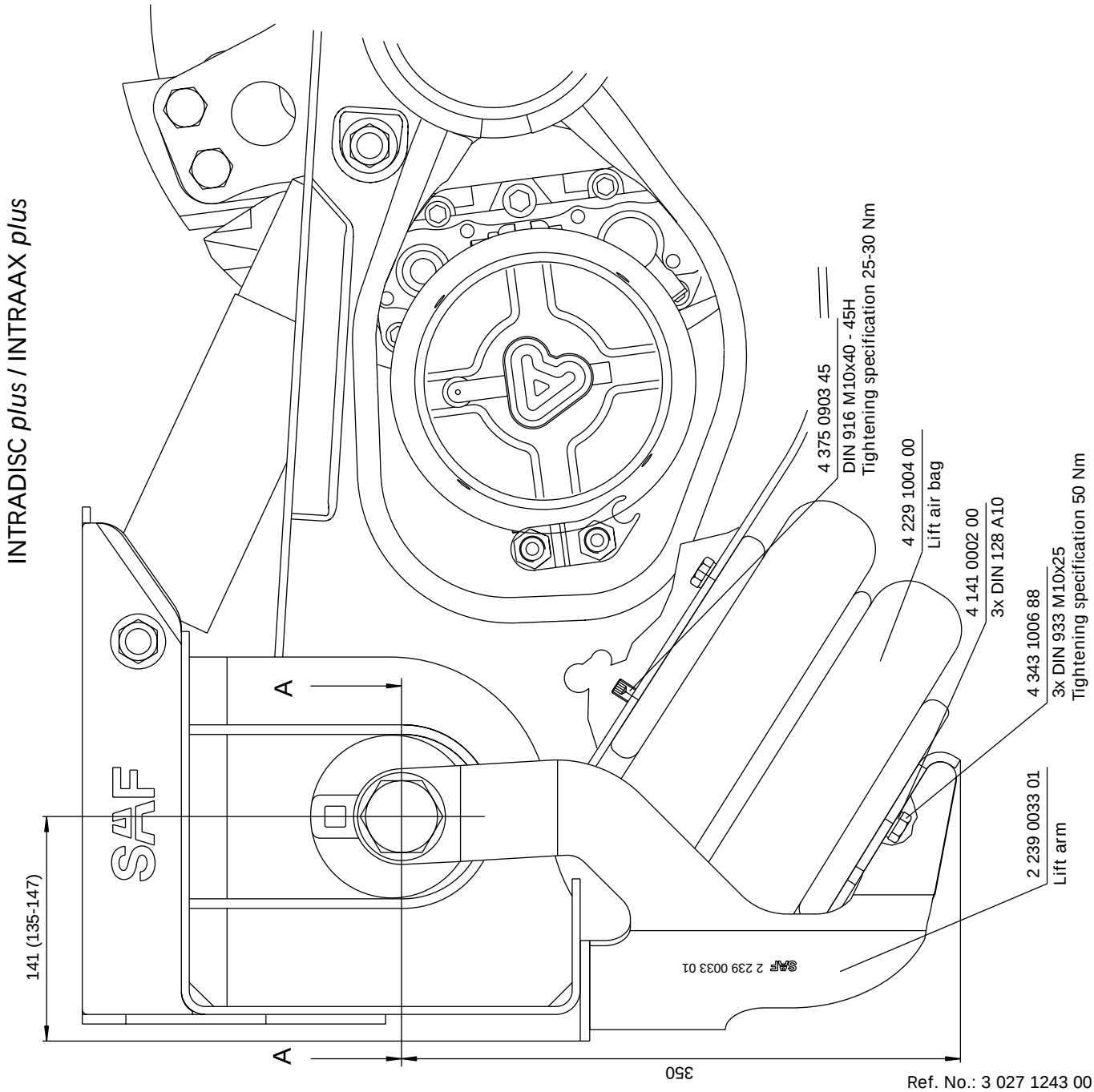

Ref. No.: 3 027 1243 00 A

INTRA *plus*
Two-side lift for aluminium hanger bracket

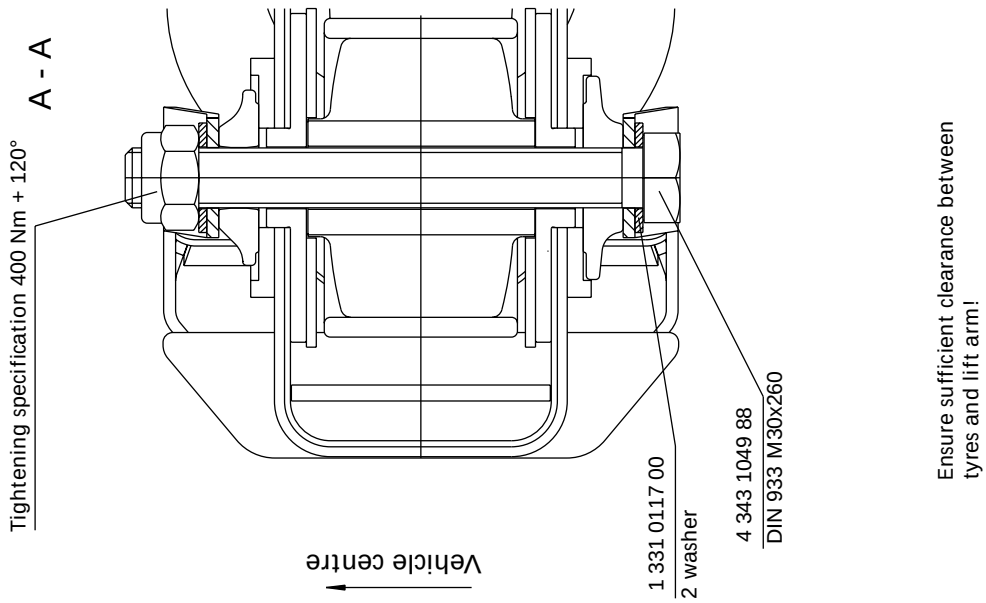

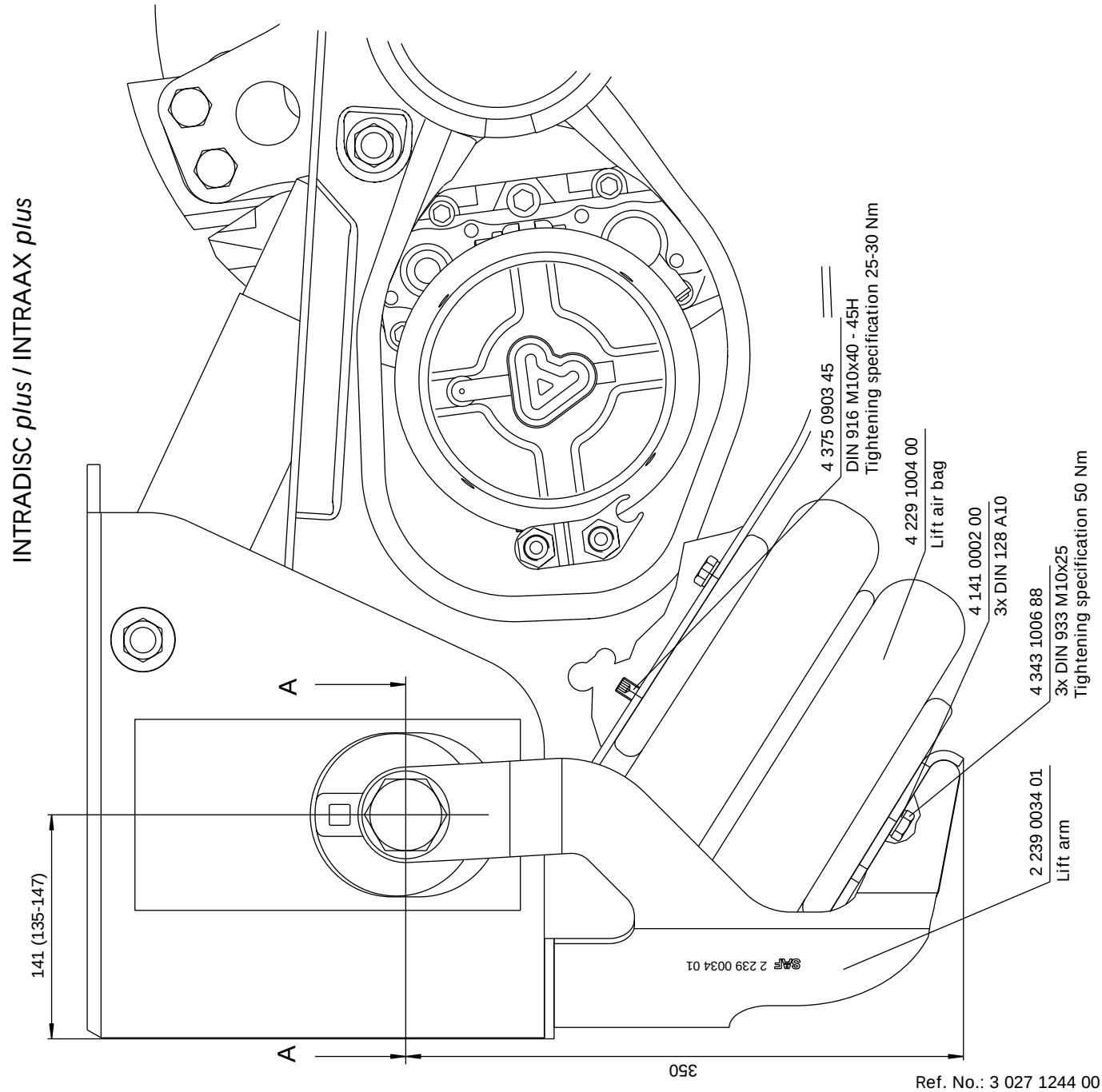

Ref. No.: 3 027 1244 00 A

Circuit diagram for two-side lift with lift axle control valve (pneumatically controlled)

For retrofitting

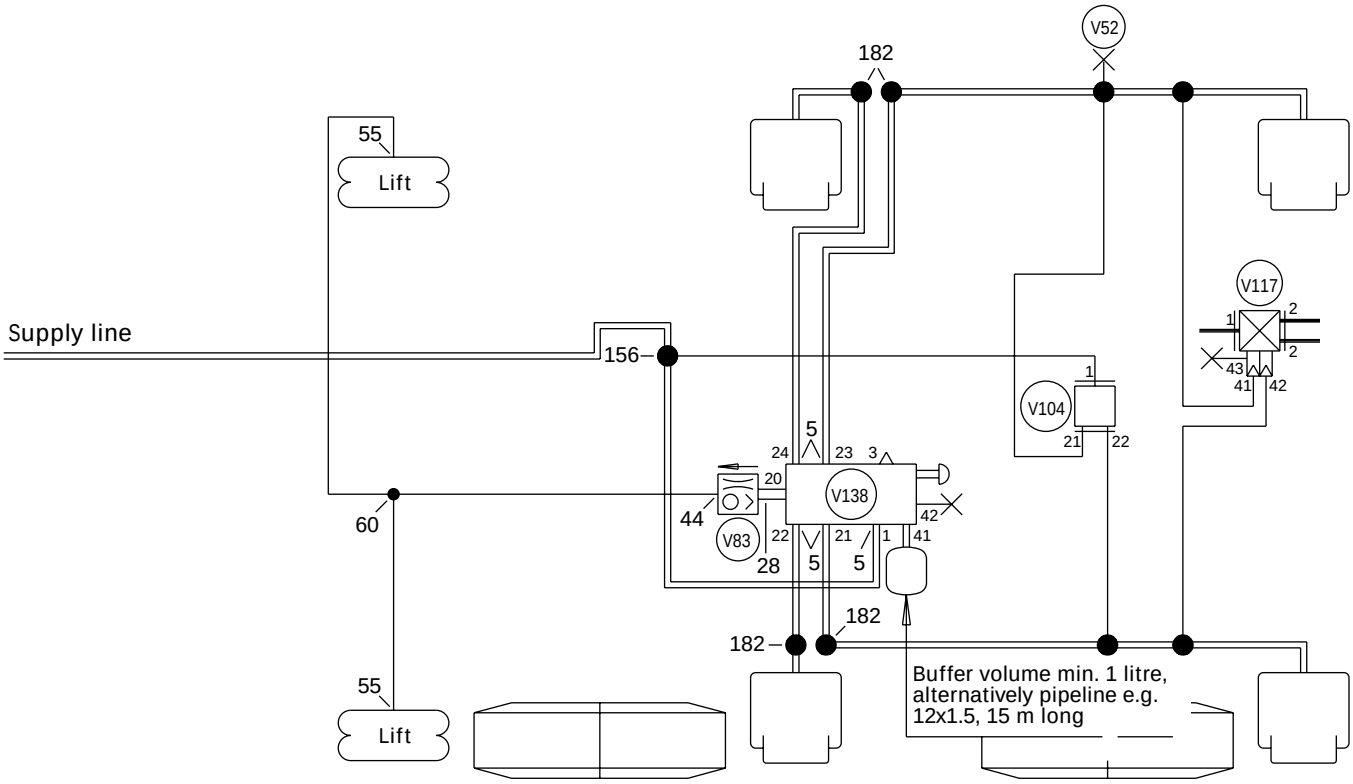

Legends to index:

a = Not our scope of supply (. ... .99)
b = Seal kit (not shown)
d = Setting range 2.5 - 7 bar, set to air bag pressure at nominal axle load (tolerance + 0.3 bar)

—— = Existing pneumatic system
—— = Pipe 8 x 1
═══ = Pipe 12 x 1.5
---- = Electric cable

(V83) = Devices
42—— = Screws
22 = Port designations

Designation	SAF Part No. / Item No.	Quantity	Index
Straight male fitting M 16 x 1.5	4 424 0005 00	5	
Double fitting M 22 x 1.5	28	1	
Straight male fitting M 22 x 1.5	44	1	
Male elbow fitting M 12 x 1.5	55	2	
T-piece coupling	60	1	
T-piece coupling	156	1	
Straight fitting	182	4	
Seal kit for M 22 x 1.5	1001	1	b
Seal kit for M 12 x 1.5	1002	1	b
Seal kit for M 16 x 1.5	1007	1	b
Non-return valve	V 4 425 0083 00	1	
Pneumatic lift axle control valve	138	1	d

Ref. No.: P 0 0000 00094 00

Recommendations for Reinforcements

Reinforcement suggestion for hanger bracket fixing to vehicle chassis

Ribbed sheet and dimple sheet for stiffening the chassis in the area of the hanger brackets.

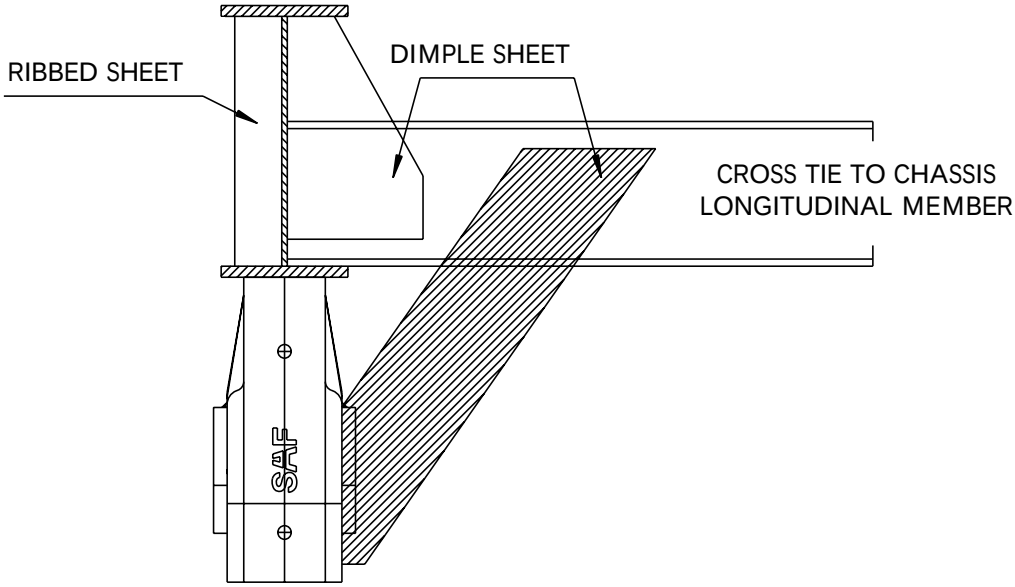

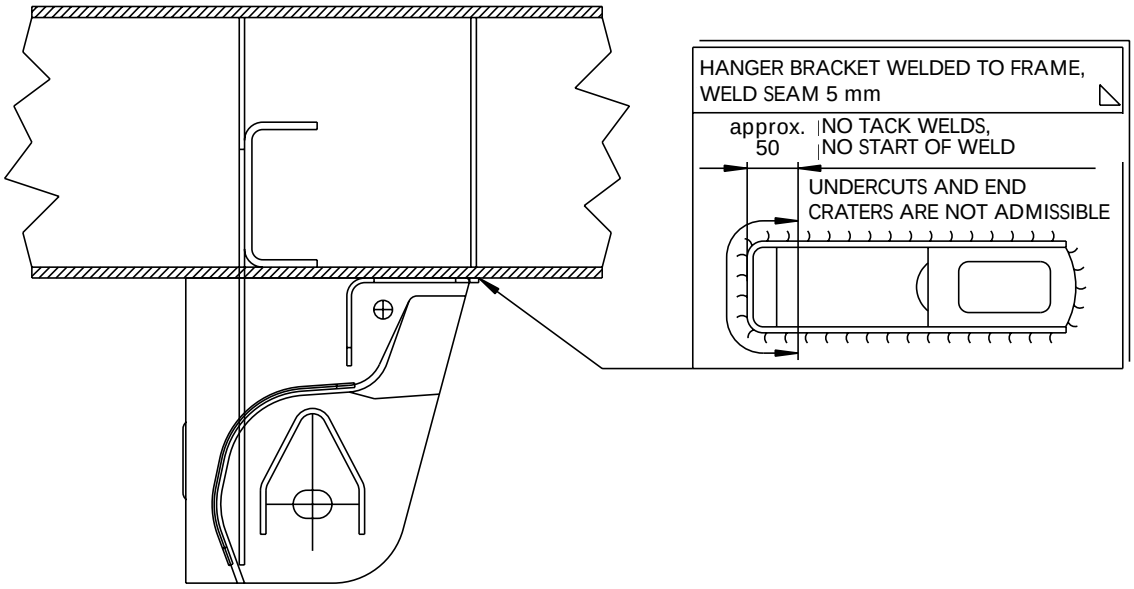

WELDING ZONE FOR SIDE REINFORCEMENT – SEE HANGER BRACKET DETAILS

The design and dimensioning of the hanger bracket reinforcement is the responsibility of the vehicle manufacturer, allowing for the type and operating conditions of the vehicle.

Ref. No.: INFO-Haltebock-010900-1

Reinforcement suggestion for hanger bracket fixing to vehicle chassis

Ribbed sheet and dimple sheet for stiffening the chassis in the area of the hanger brackets.

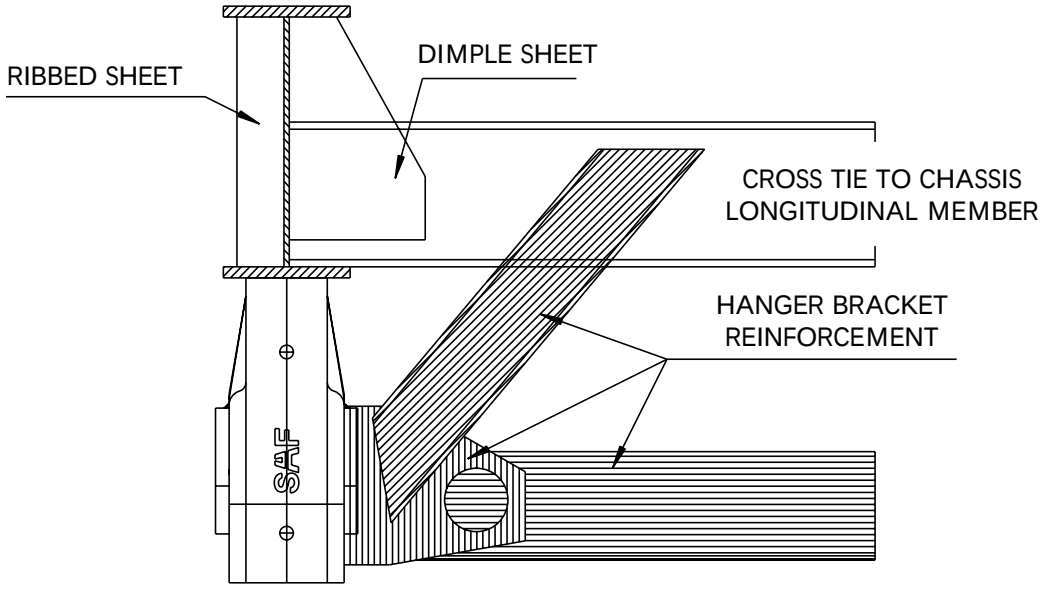

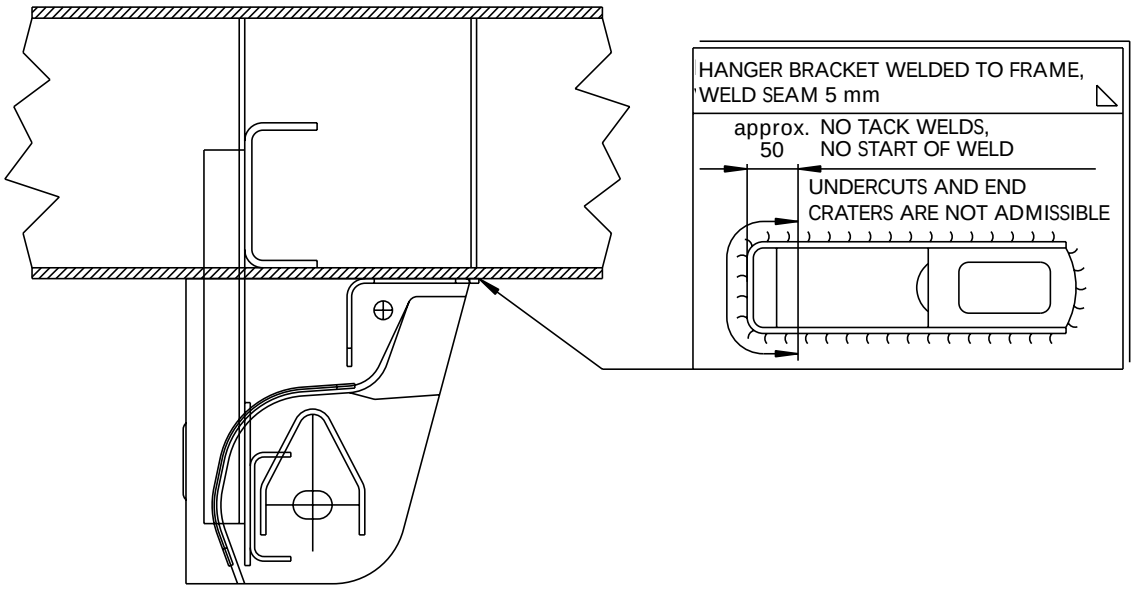

WELDING ZONE FOR SIDE REINFORCEMENT – SEE HANGER BRACKET DETAILS

The design and dimensioning of the hanger bracket reinforcement is the responsibility of the vehicle manufacturer, allowing for the type and operating conditions of the vehicle.

Ref. No.: INFO-Haltebock-010900-2

Hanger bracket assembly
IU / IO series – 200 high

Adjustable functional suspension arm bearing

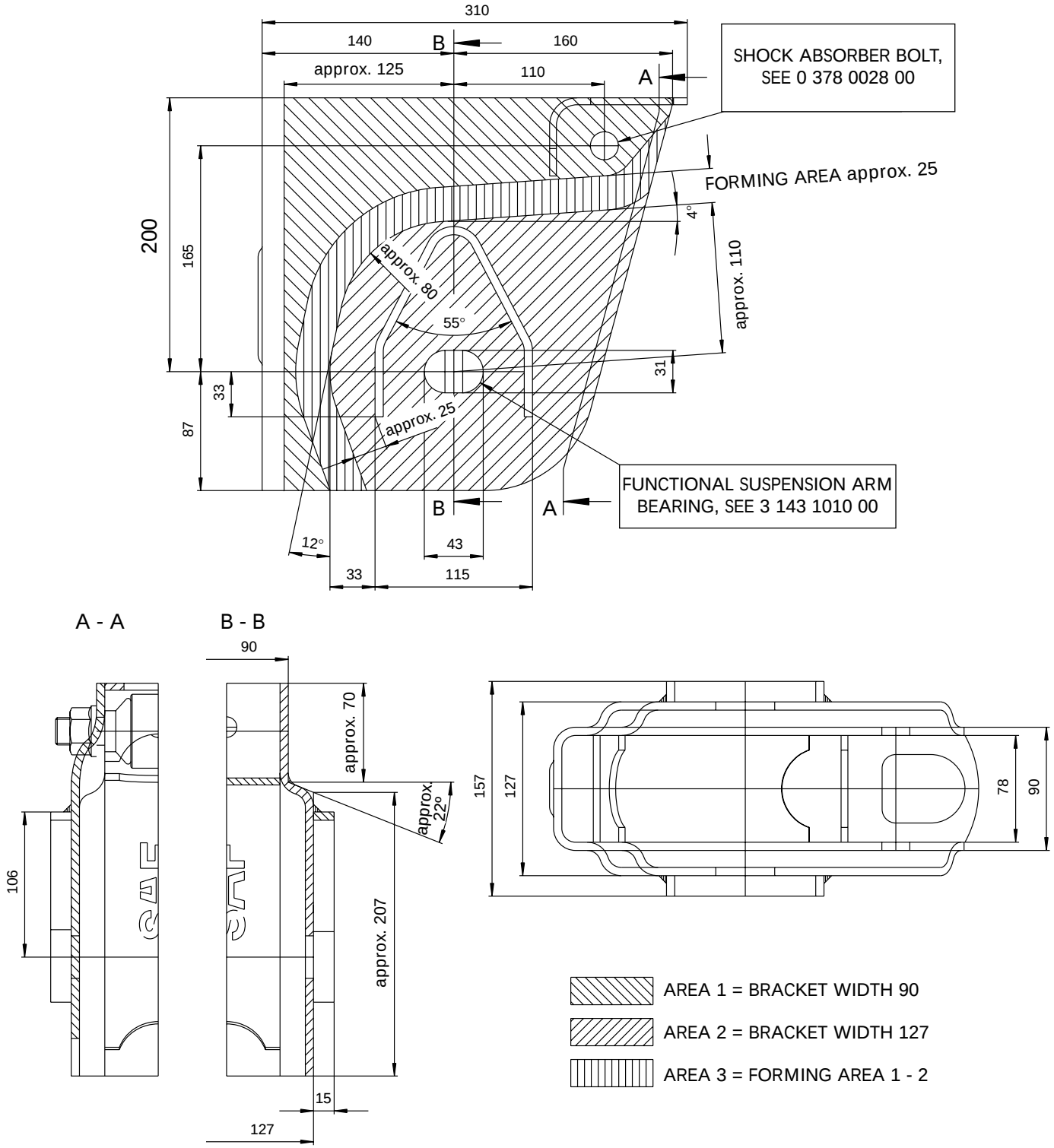

Ref. No.: 2 183 0825 00-INFO C

Hanger bracket assembly
IU / IO series – 250 high

Adjustable functional suspension arm bearing

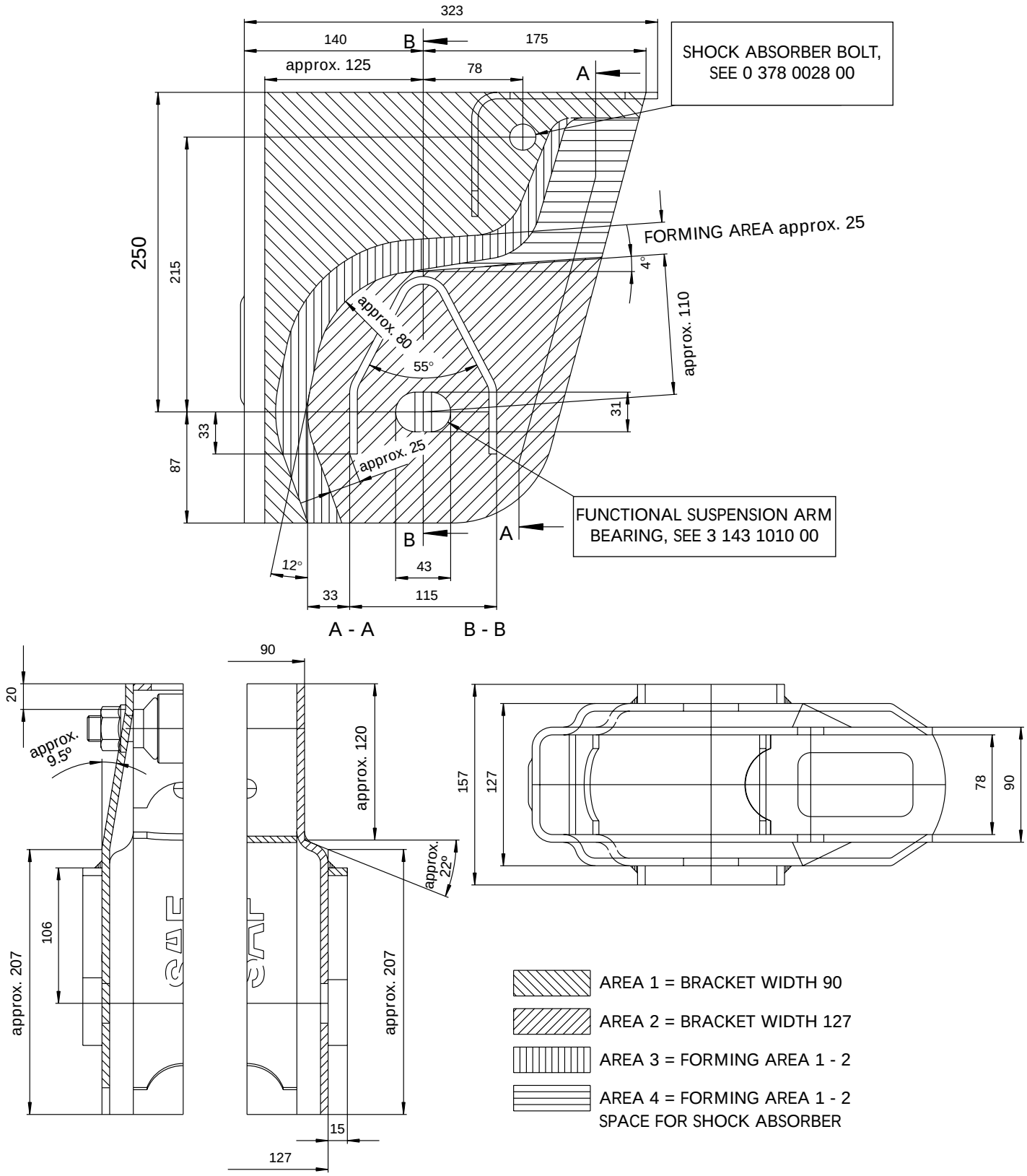

Ref. No.: 2 183 0826 00-INFO C

Adjustable functional suspension arm bearing

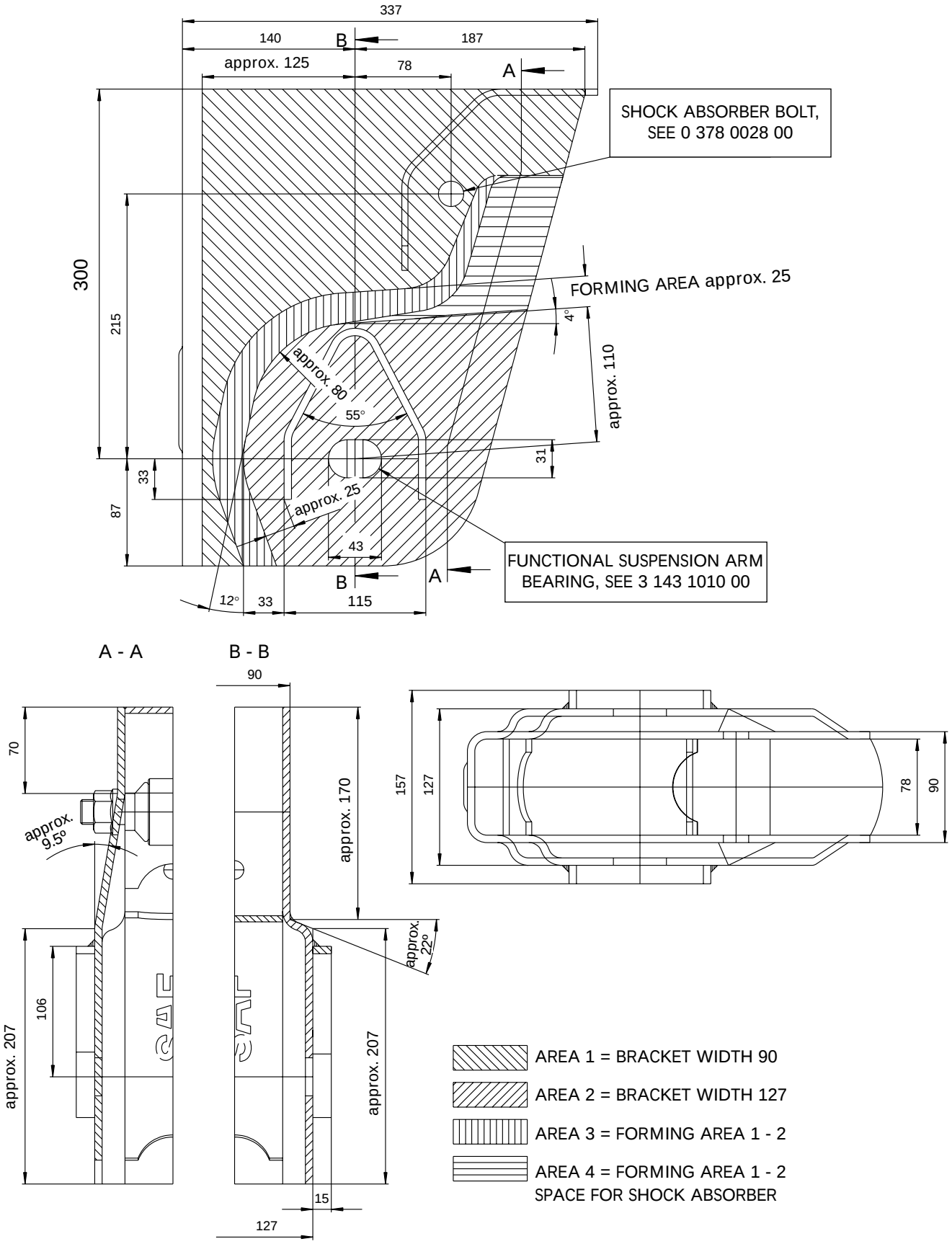

Adjustable functional suspension arm bearing

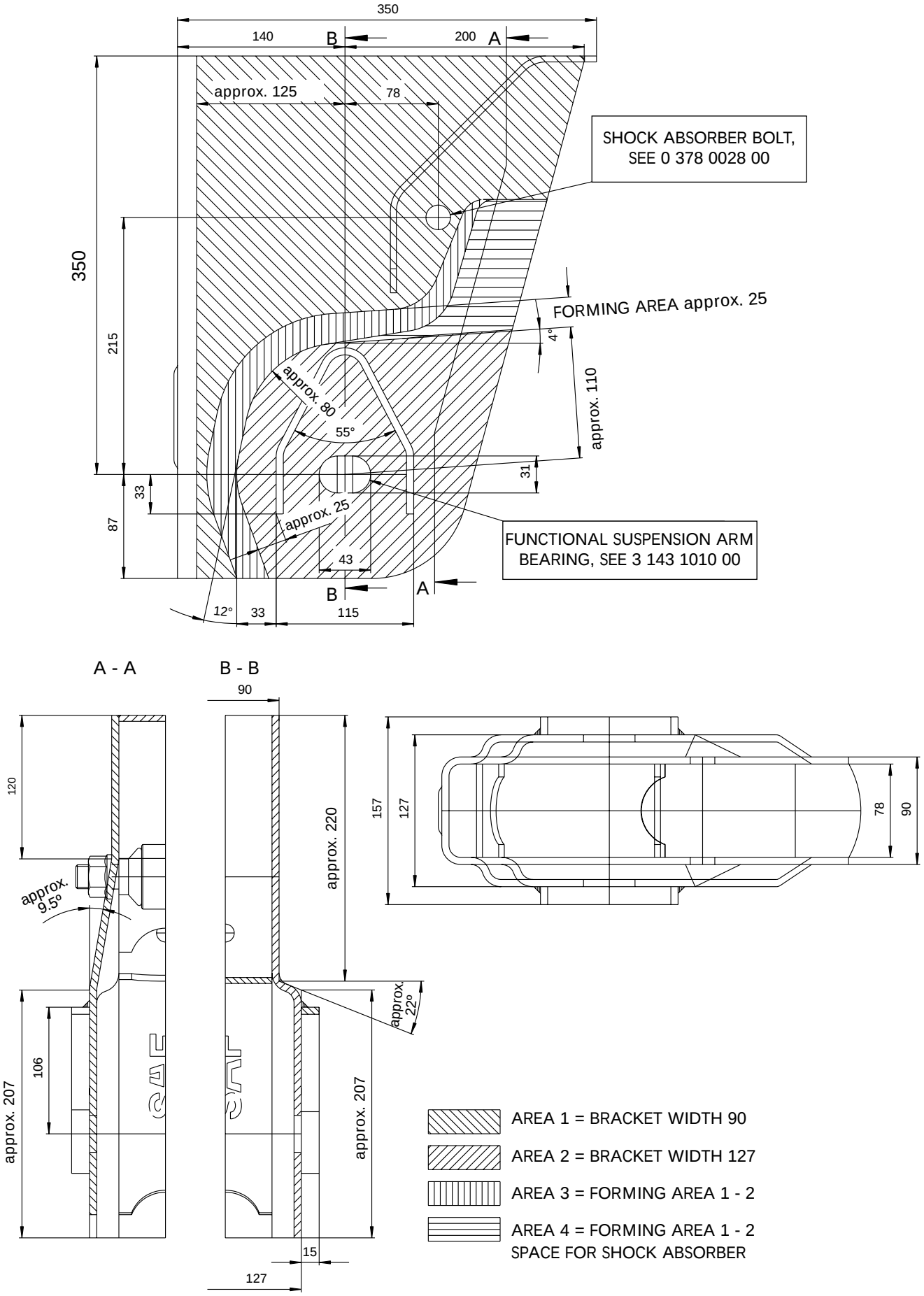

Ref. No.: 2 183 0828 00-INFO B

Longitudinal member centre – Air bag centre

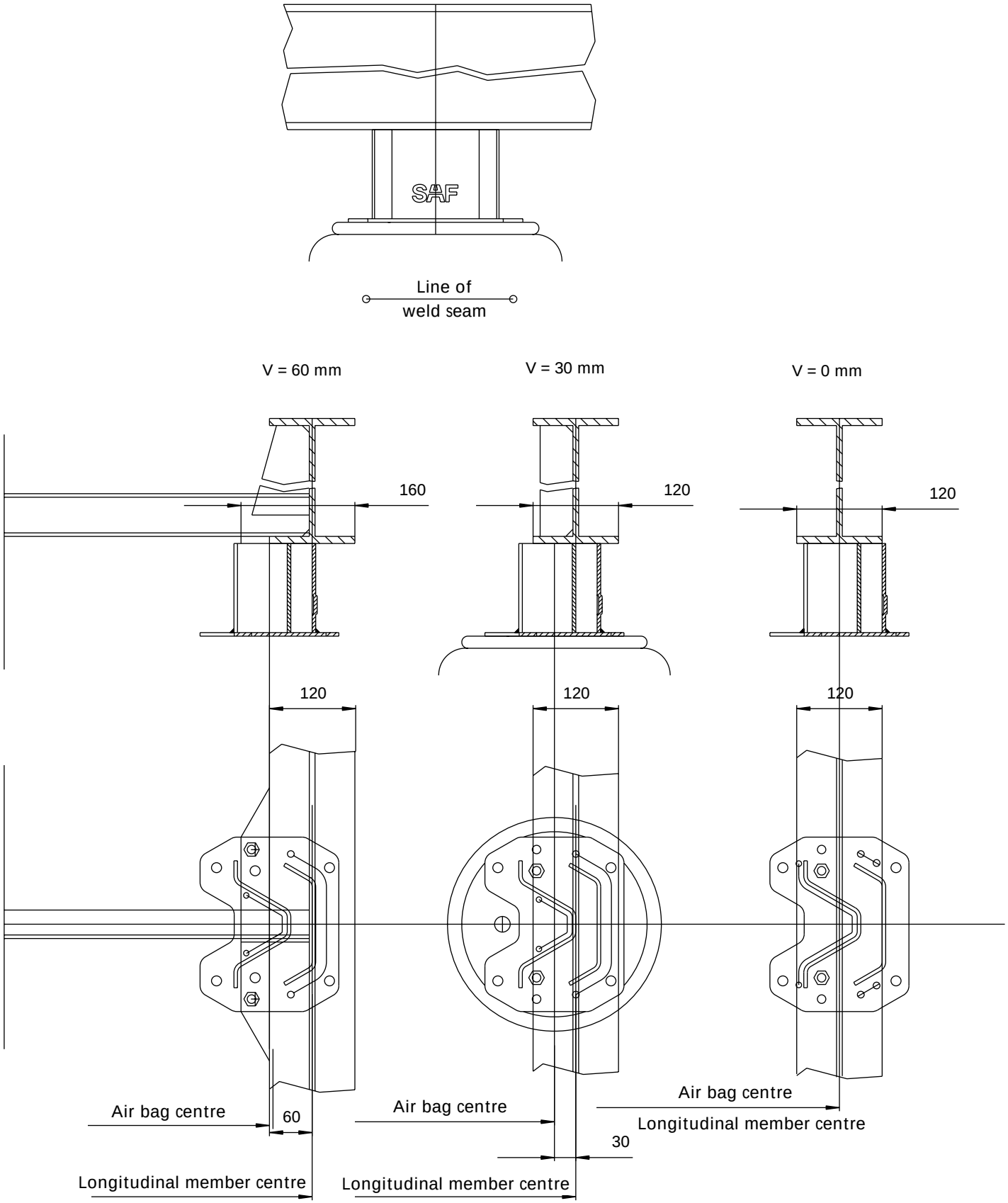

The illustrations for the welding on of the air suspension brackets and their reinforcement are SAF recommendations. The dimensions, variants and design are at the discretion and responsibility of the vehicle manufacturer.

Ref. No.: P 0 0000 00078 00

Example: Installation of steered axles in vehicle chassis

With crossmember / hanger bracket

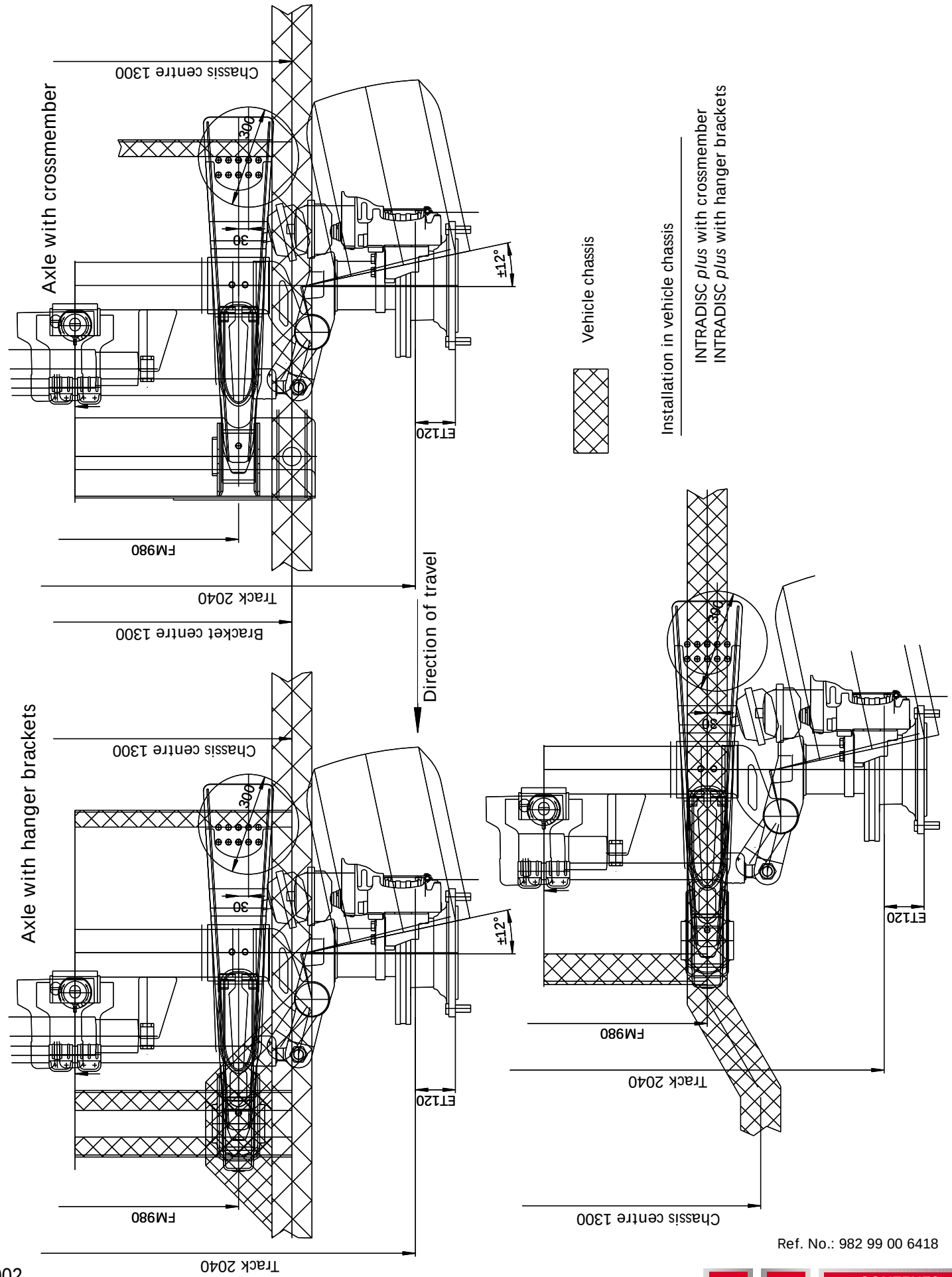

Ref. No.: 982 99 00 6418

Installation Recommendations and Tightening Torques

Suspension arms – shock absorbers – air bags/steel hanger brackets

All contact surfaces of the functional suspension arm and shock absorber bolts must not be coated with primers or paints over the existing primer coating. (Coat thickness max. 45 µm)

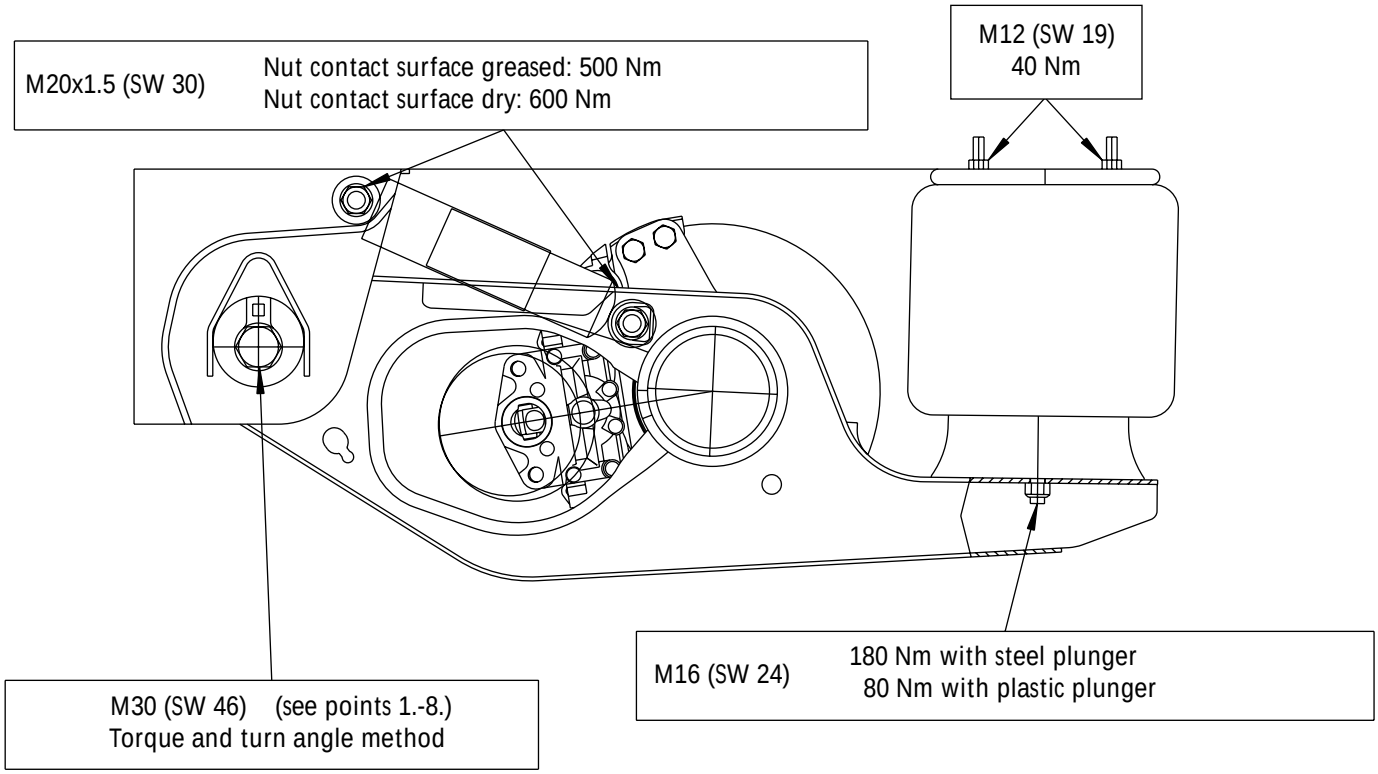

1. Faces of the HD bearing bush must be free from oil and grease.
2. Install the functional suspension arm bearing parts as shown in the spare parts drawing.
3. Adjust the vehicle to ride height.
4. Pretighten the nuts M30/SW46 to 400 Nm using a torque wrench (see Fig. 1).
5. Align the marks on the welded hub, hexagon head bolt and nut over one corner of the nut (see Fig. 2).
6. Tighten the nut a further 120° (2 nut corners), holding the bolt head to prevent the bolt from turning with the nut (see Fig. 3).
7. Perform a visual check. Correct the turn angle, if necessary.
8. Make marks with a counterpunch on the welded hub, hexagon head bolt and nut in a line after completing the tightening procedure.

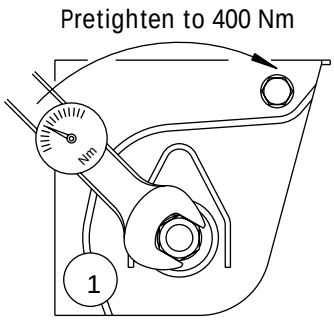

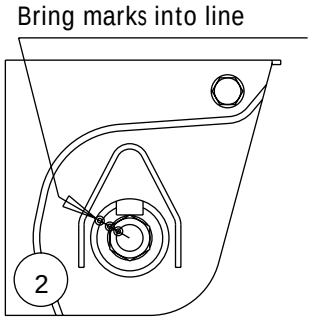

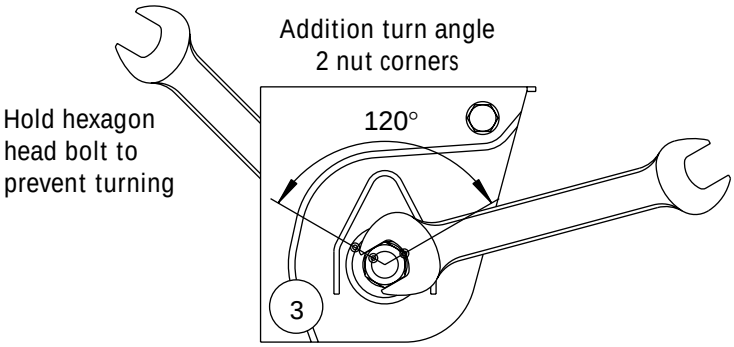

Suspension arms - shock absorbers - air bags/aluminium hanger brackets

All contact surfaces of the functional suspension arm and shock absorber bolts must not be coated with primers or paints over the existing primer coating. (Coat thickness max. 45 µm)

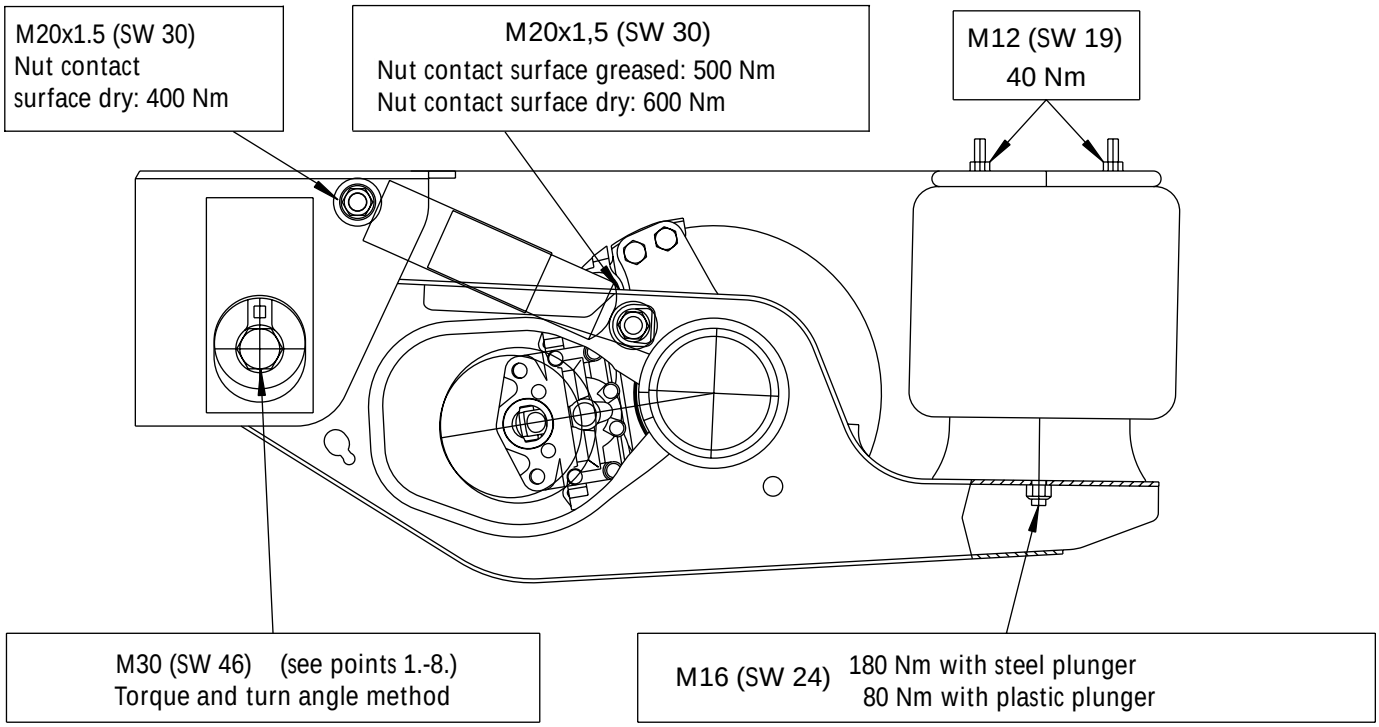

1. Faces of the HD bearing bush must be free from oil and grease.
2. Install the functional suspension arm bearing parts as shown in the spare parts drawing.
3. Adjust the vehicle to ride height.
4. Pretighten the nuts M30/SW46 to 400 Nm using a torque wrench (see Fig. 1).
5. Align the marks on the welded hub, hexagon head bolt and nut over one corner of the nut (see Fig. 2).
6. Tighten the nut a further 120° (2 nut corners), holding the bolt head to prevent the bolt from turning with the nut (see Fig. 3).
7. Perform a visual check. Correct the turn angle, if necessary.
8. Make marks with a counterpunch on the welded hub, hexagon head bolt and nut in a line after completing the tightening procedure.

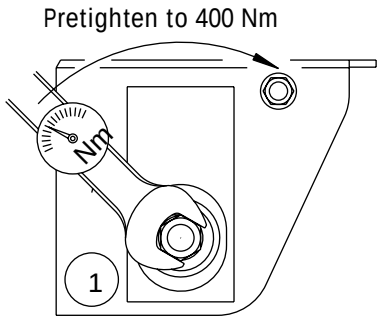

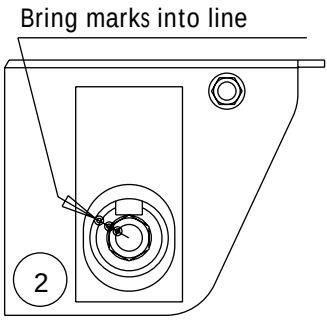

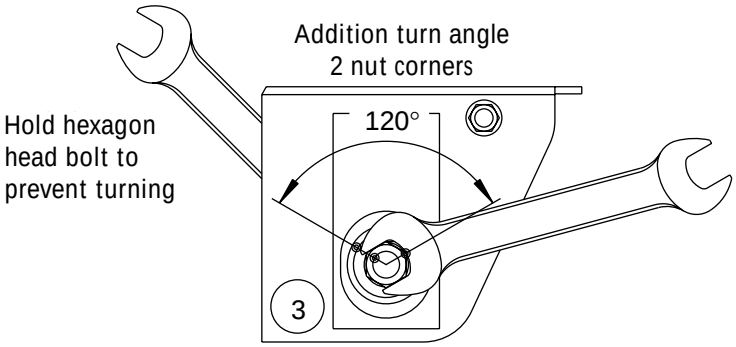

Caution!
Mounting bolt not maintenance-free!
Check tightening torque after 500 km.
Further check every 6,000 km.
Test torque 1200 Nm!

Ref. No.: TD 0 0004 004 00

Installation situation for INTRADISC *plus* and INTRAAX *plus* shock absorbers

Steel hanger bracket / crossmember and suspension arm

Bolt kit 3 341 2803 10
Collared bolt M20x1.5x120 - 10,9
4 343 2803 10
- dacromet coated -
Collared nut M20x1.5 - 10
4 247 4044 10
Tightening torque:
Contact surfaces greased: 500 Nm
Contact surfaces dry: 600 Nm

ATTENTION:

TOP mark facing upwards in working position

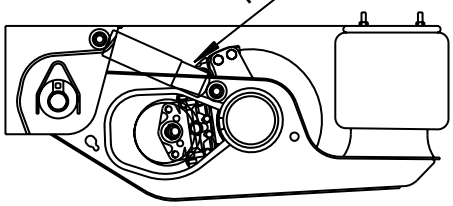

Bolt kit 3 341 2802 10
Collared bolt M20x1.5x150 - 10,9
4 343 2802 10
- dacromet coated -
Collared nut M20x1.5 - 10
4 247 4044 10
Tightening torque:
Contact surfaces greased: 500 Nm
Contact surfaces dry: 600 Nm

Steel hanger bracket / crossmember

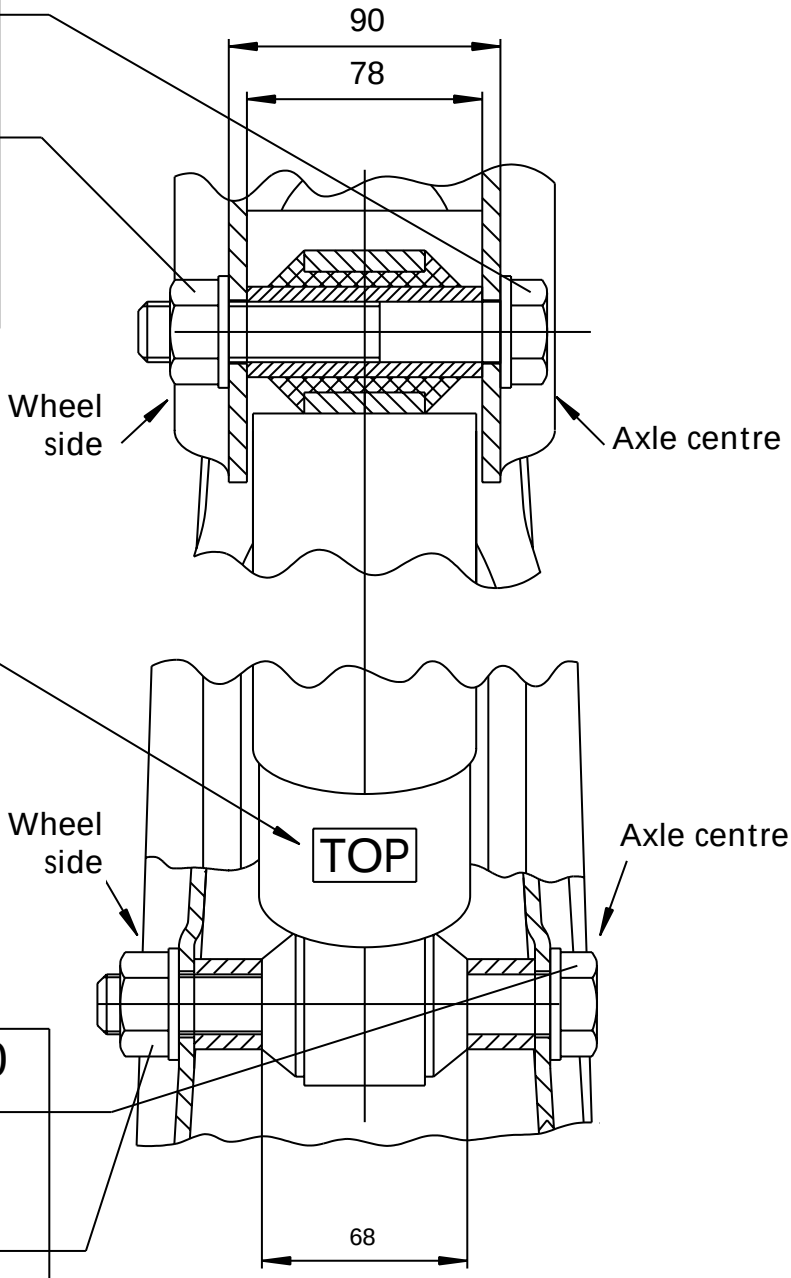

Functional suspension arm

Installation situation for INTRADISC *plus* IU / IO shock absorbers

Aluminium hanger bracket and suspension arm

Mounting parts kit
3 044 1054 00

Collared bolt M20x1.5x200 - 10,9
4 343 2804 10
- dacromet coated -
Spacer washer (2x) 1 097 0008 00
Washer 1 331 0136 00
Collared nut M20x1.5 - 10
4 247 4044 10
Tightening torque:
Contact surfaces dry: 400 Nm

Caution! **Mounting bolt not maintenance-free!**

Aluminium hanger bracket

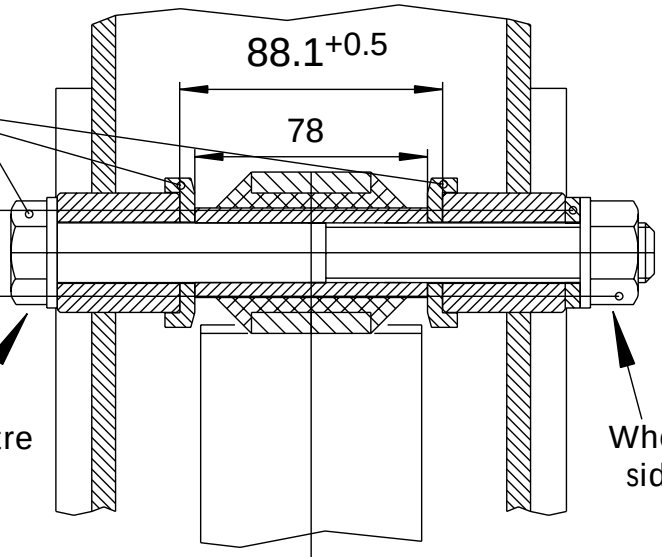

ATTENTION:

TOP mark facing upwards in working position

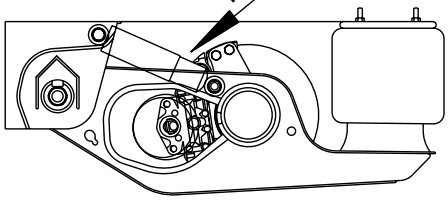

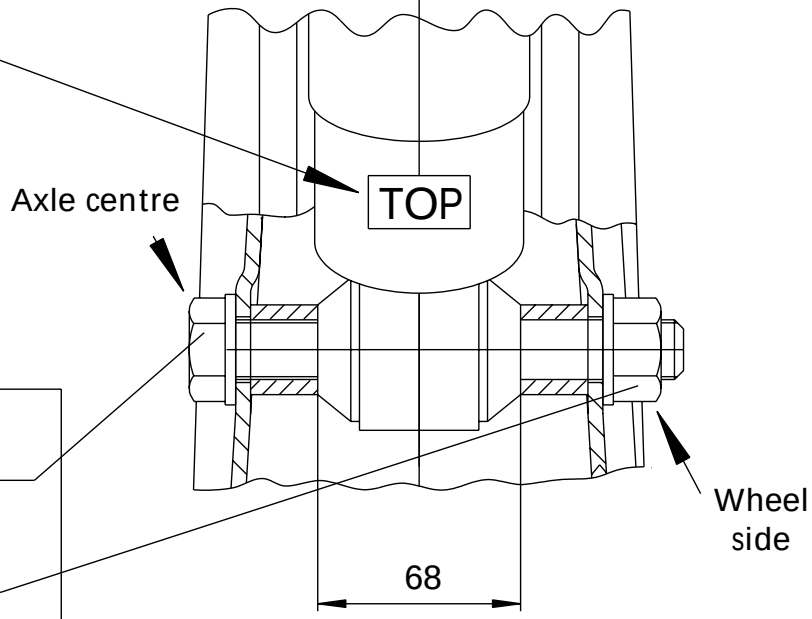

Bolt kit 3 341 2802 10

Collared bolt M20x1.5x150 - 10,9
4 343 2802 10
- dacromet coated -
Collared nut M20x1.5 - 10
4 247 4044 10
Tightening torque:
Contact surfaces greased: 500 Nm
Contact surfaces dry: 600 Nm

Functional suspension arm

Installation situation for INTRADISC *plus* IU / IO shock absorbers

Crossmember and suspension arm / steered axle / V = 110

Bolt kit 3 341 2802 10

Collared bolt M20x1.5x150 - 10,9
4 343 2802 10
- dacromet coated -

Collared nut M20x1.5 - 10
4 247 4044 10
Tightening torque:
Contact surfaces greased: 500 Nm
Contact surfaces dry: 600 Nm

ATTENTION:

TOP mark facing upwards in working position

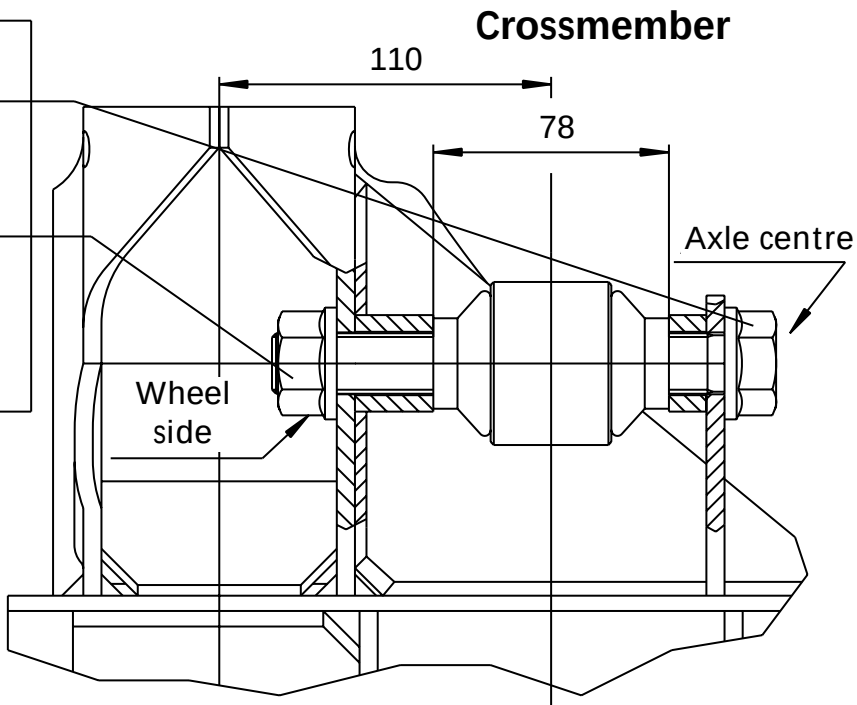

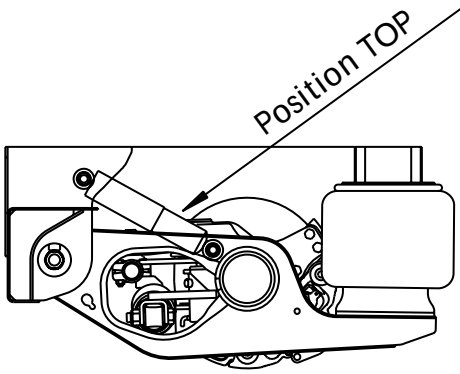

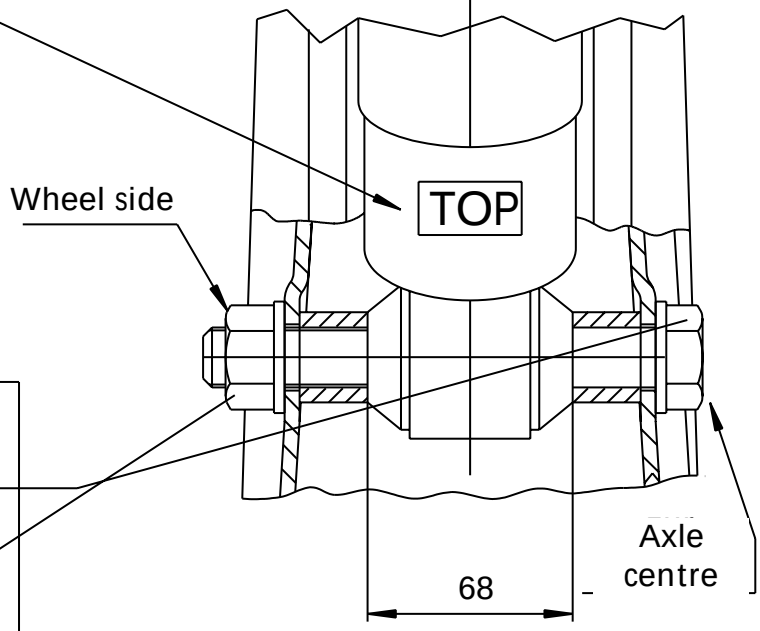

Bolt kit 3 341 2802 10

Collared bolt M20x1.5x150 - 10,9
4 343 2802 10
- dacromet coated -

Collared nut M20x1.5 - 10
4 247 4044 10
Tightening torque:
Contact surfaces greased: 500 Nm
Contact surfaces dry: 600 Nm

Functional suspension arm

INTRADISC *plus* IU suspension arm – cranked
INTRADISC *plus* IO suspension arm – straight

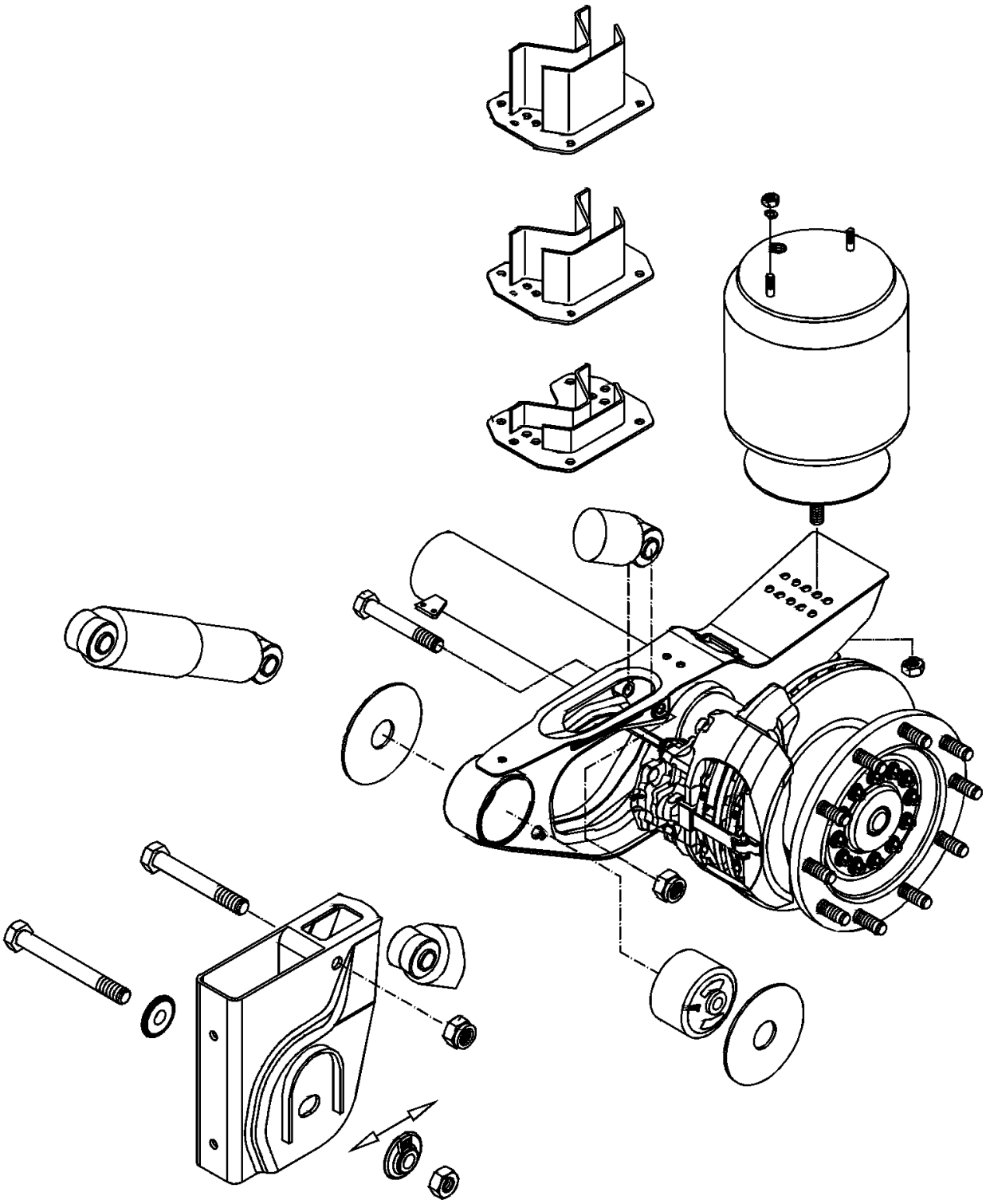

Mounting of diaphragm brake cylinders and spring-loaded brake cylinders on SAF axles

Connection of diaphragm cylinders to standard baseplates

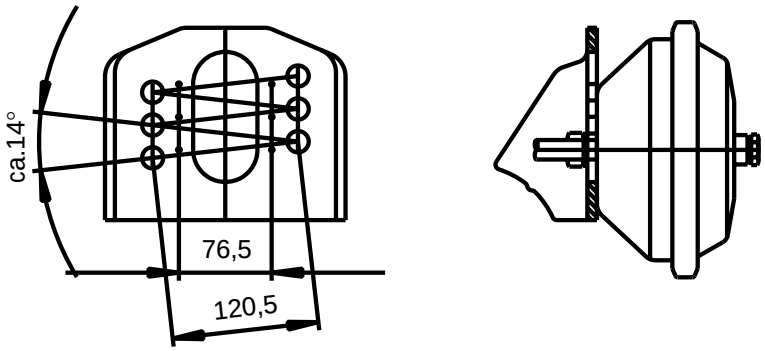

Position of the mounting bolts:

- Distance between hole lines 120.5 mm at an angle of approx. 7° from the horizontal
- Distance between hole lines 76.5 mm not required on axles with axle load > 6,000 kg

Connection of spring-loaded brake cylinders to special baseplates

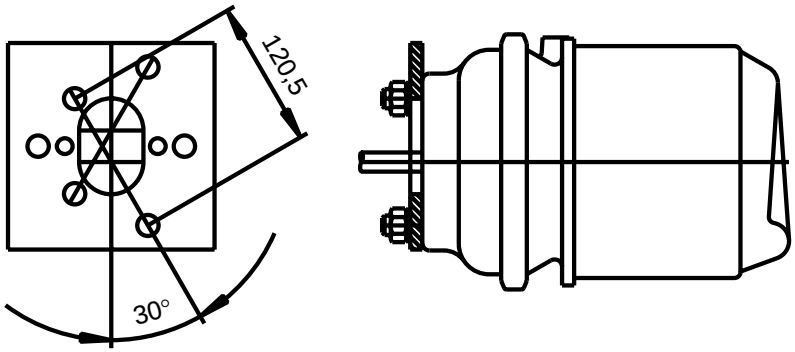

Position of the mounting bolts at an angle of 30° to the vertical!

Connection of spring-loaded brake cylinders to standard baseplates

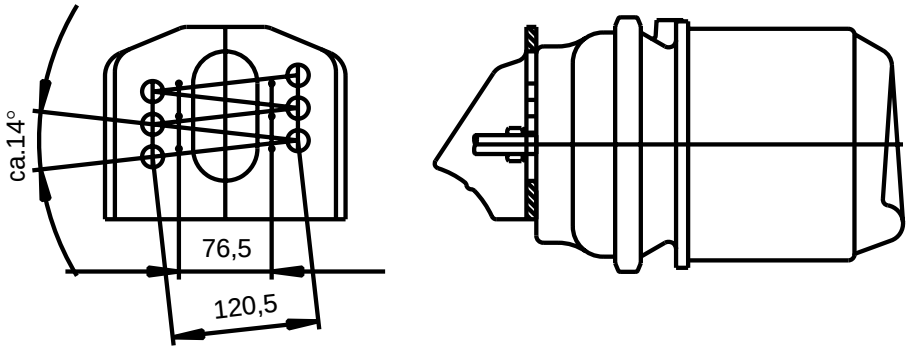

Position of the mounting bolts:

- Distance between hole lines 120.5 mm at an angle of approx. 7° from the horizontal
- Distance between hole lines 76.5 mm not required on axles with axle load > 6,000 kg

The SAF baseplates are sufficiently well dimensioned to take spring-loaded brake cylinders where the manufacturer permits installation with the mounting bolts horizontal.
The flatness of the baseplates when new complies with the specifications of the brake cylinder manufacturers, a reinforcing plate to strengthen the baseplate is not necessary.

Observe the installation instructions of the brake cylinder manufacturers.
A major factor for the serviceability of the brake cylinders and baseplates is compliance with the specified tightening torques and regular checking of the torque.

In conjunction with axle suspensions, please contact SAF to obtain approval for installation due to the larger space requirement of spring-loaded brake cylinders where approval is not automatically given.

Crossmember for steered trailing axle

In offset version (e.g. hanger bracket centre 1200 mm / functional suspension arm centre 980 mm)

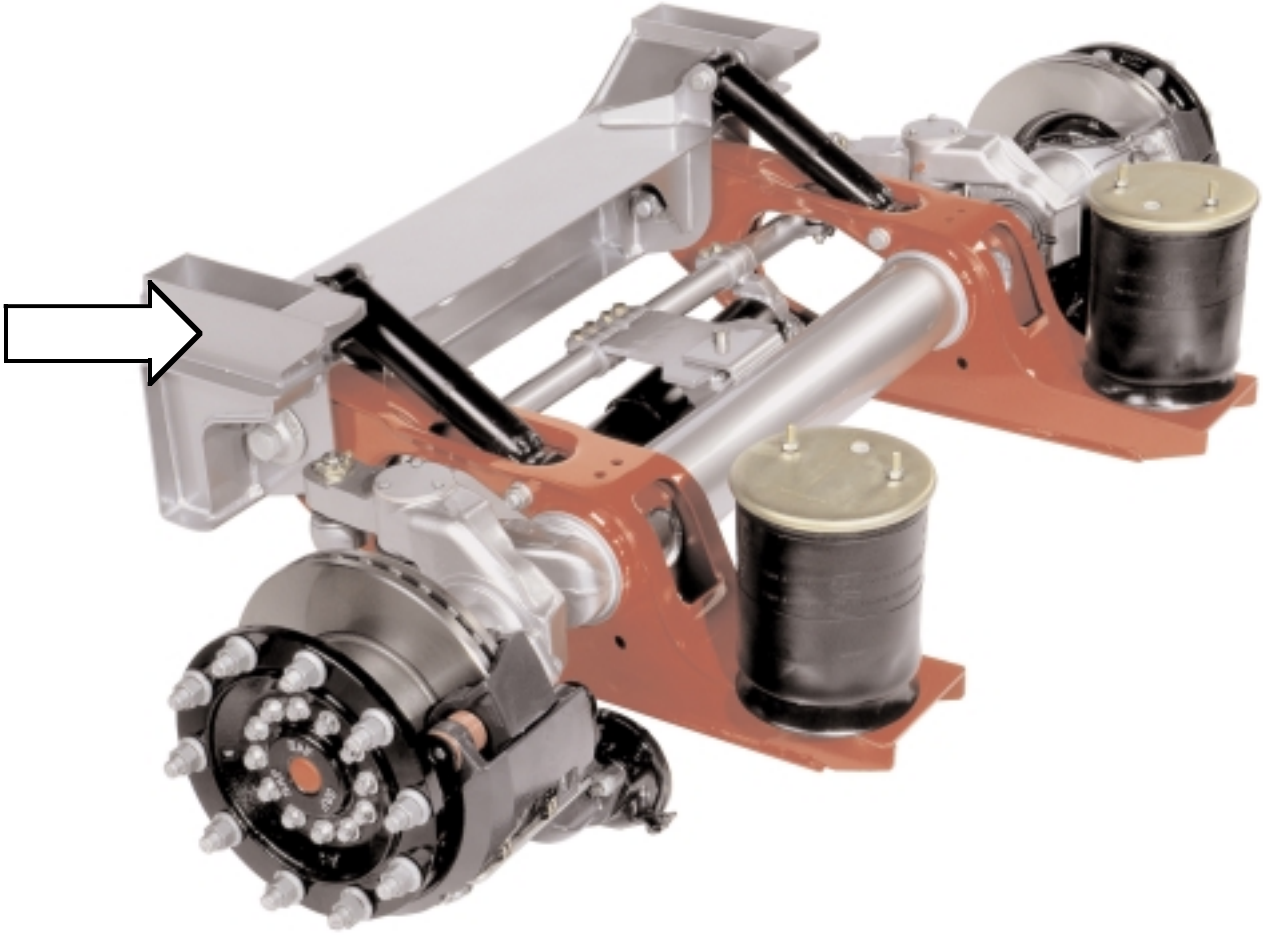

These offset crossmembers for steered trailing axles are available in an UNPRIMED and a PRIMED (black) version.

For the **PRIMED cross-member version**, a complete immersion priming is necessary due to the components and hollow spaces. Before welding these cross-members to the vehicle chassis, the vehicle manufacturer must **remove the primer coating in the welding area of the cross-member**.

General Information

Information on surface coating of SAF components

Corrosion protection of SAF products

- Axle beams and functional suspension arms with cathodic hot-dip coating, colour black RAL 9005.
- All bolts and fittings with dacromet coating, colour grey metallic.
- Front hanger brackets with 2-component coating, colour black RAL 9005.
- Wheel contact surface: Thin cathodic hot-dip coating, coat thickness max. 30 µm, colour black RAL 9005

Cathodic hot-dip coating (KTL)

The coat thickness is max. 45 µm.
Features:
- Complete corrosion protection in all areas of the component
- High surface hardness with uniform coat thickness
- Can be painted over with all single-component or 2-component top coats
- Top coat not necessary is gloss is not of paramount importance

2-component priming

Primer coat for additional top coat
Coat thickness is max. 45 µm.

Dacromet coating

Corrosion protection with sliding properties
Protection min. 480 hours in salt spray test to DIN 50021

Treatment during axle and suspension installation

- In principle, hot-dip coating and 2-component primers can be welded. SAF recommends, however, that these coats be removed in the area of weld seams.
- All contact surfaces of the spring suspension bolts and shock absorber bolts must not have additional primer or paint coatings
- Wheel contact surfaces must not be painted

ABS cable laying in the functional suspension arm

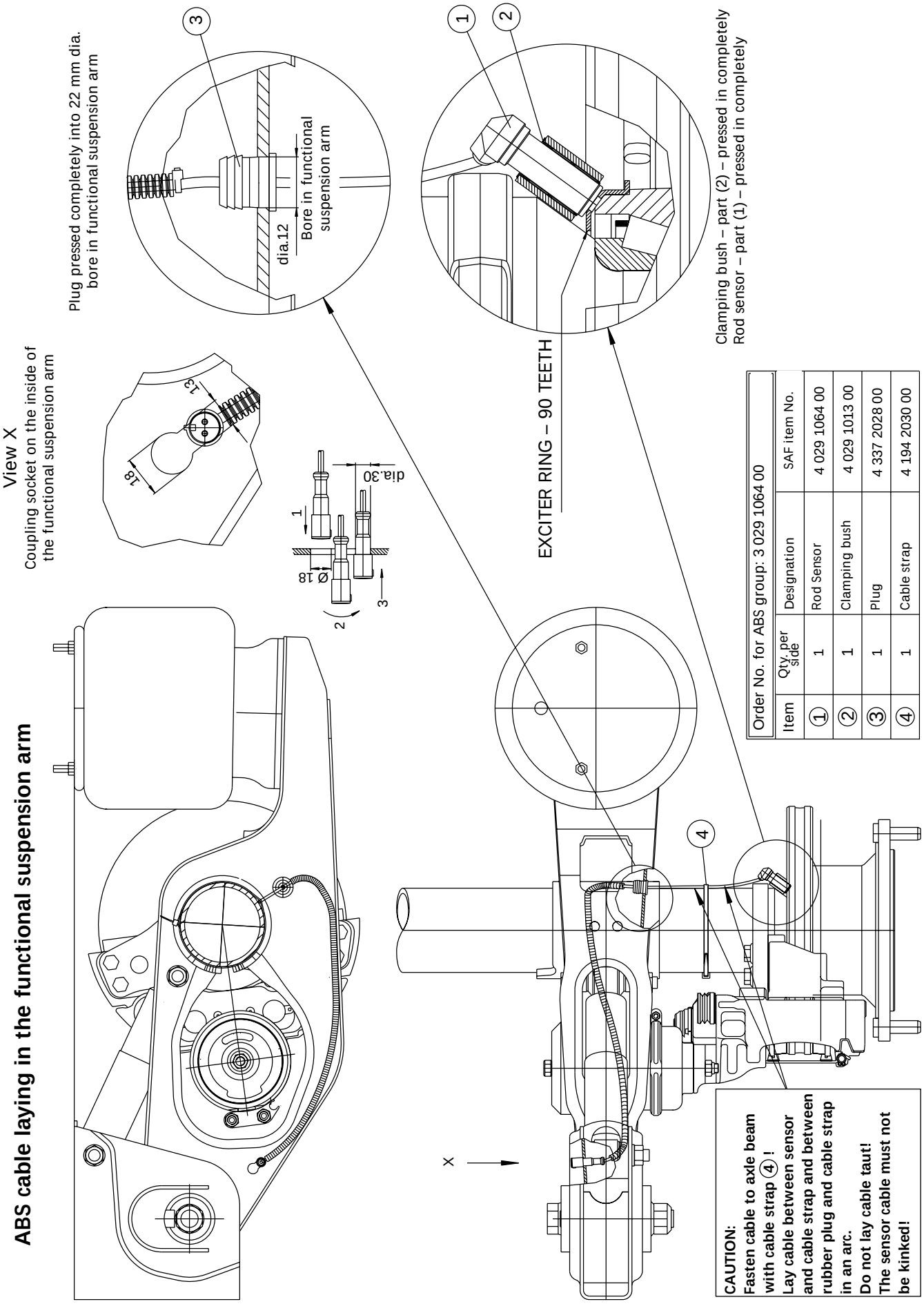

Order No. for ABS group: 3 029 1064 00

Item	Qty. per side	Designation	SAF item No.
①	1	Rod Sensor	4 029 1064 00
②	1	Clamping bush	4 029 1013 00
③	1	Plug	4 337 2028 00
④	1	Cable strap	4 194 2030 00

Ref. No.: 3 029 1064 00 B

SAF steered trailing axle with stabilising damper

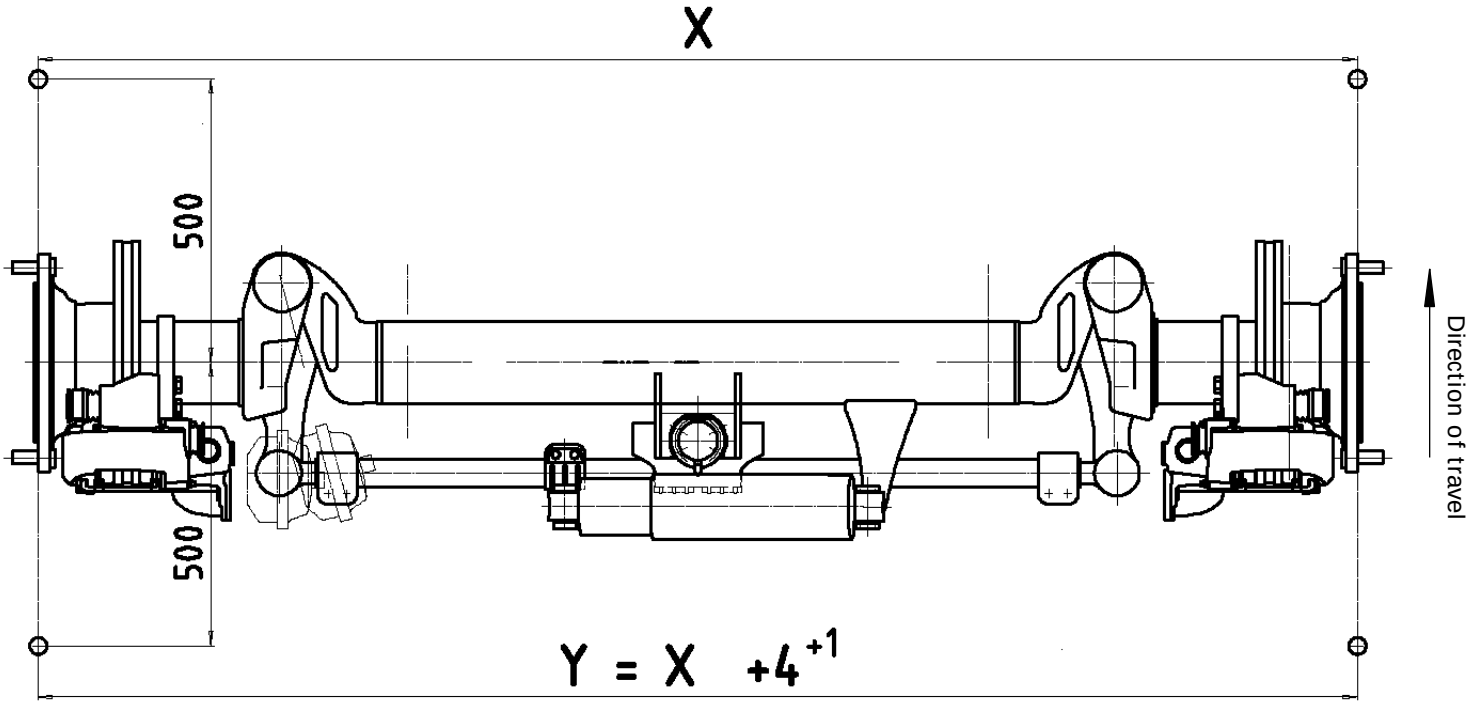

Description of design and function of the SAF steered trailing axle with stabilising damper

Design features:
The track of the steered trailing axle is determined by the path of the guide axles installed in front of this axle. Separate steering movements cannot be made.

The trailing effect is triggered by the pivot point of the steering knuckle installed 140 mm in front of the axle. The lateral distance between the track width and the pivot point of the steering knuckle creates a moment which is balanced by the tie rod connection of the right-hand side to the left-hand side.

- The strongly dimensioned springs of the stabilising damper assist the return of the wheels to the “straight ahead” position.
- The damping of the stabilising damper suppresses fluttering of the steering.
- The reversing lock is triggered by a drop in pressure and blocks the steering movements in the “straight ahead” position.

Functional features of the stabilising damper system
- The stroke-dependent damper **(stabilising damper)** takes on the function of stabilising and damping when driving straight ahead and in curves.
- The damper suppresses high-frequency vibrations. The integral springs guarantee steady straight-ahead travel.
- When negotiating curves, the integral springs of the stabilising damper compensate the lateral forces and guarantee jerk-free steering while assisting the return of the wheels to the “straight ahead” position.
- The reversing lock is triggered by a drop in pressure in the system.

Installation of the stabilising damper
(Vibration damper with integral steering stabiliser)

In order to avoid transport damage, the stabilising dampers are supplied loose.

Attention!
Position of the stabilising damper:
The mounting bush on the small cylinder barrel must be positioned at the lowest point.

Procedure for installation of the damper:
- Check the proper installation of the axle
- Turn the wheels to the straight-ahead position (with slight toe-in)
  (the reversing lock must be able to engage)
- Loosen the stabilising damper mounting clamp on the tie rod
- Install the stabilising damper without strain (do not compress or extend)
- Tighten the mounting clamp on the tie rod
- Check the axle orientation and free movement of the damper

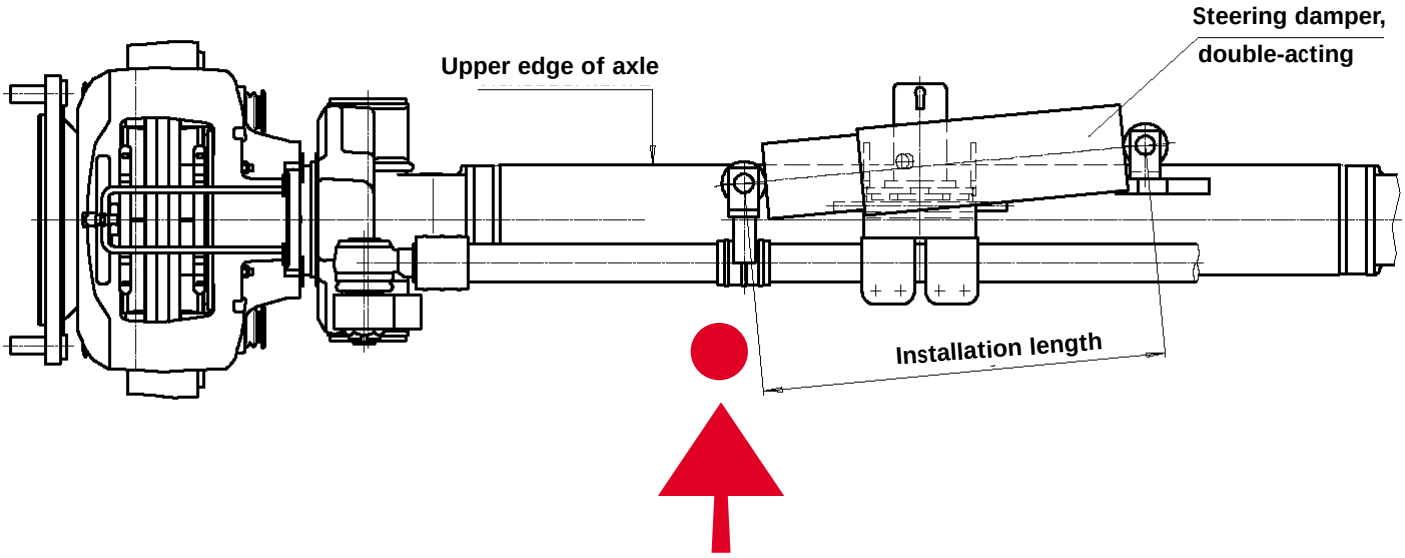

The red dot must be facing to the ground after installation!

Classification of exciter ring teeth to axle types

With the availability of the disc brake with disc diameter 377 mm for 19.5” and 22.5” tyres, the number of teeth on the exciter ring must permit the use of both tyre sizes.

For these axle version, SAF has chosen 90 as the standard number of teeth. This number of teeth covers the tyre size range from 245 / 70 R 19.5” twin to 425 / 65 R 22.5” single.

Classification of axle types to exciter ring teeth:

Number of teeth	Axle type	Tyres
90	SK RS 9019 / SK RZ 9019 SK RS 11019 / SK RZ 11019 SK RS 9037 / SK RZ 9037 SK RS 11037 / SK RZ 11037 SK RB 9019 SK RB 9022	19.5” 19.5” 19.5” 19.5” 19.5” / 22.5” 22.5”
100	SK RS 9022 / SK RZ 9022 SK RS 11222 / SK RZ 11222 SK RS 9042 / SK RZ 9042 SK RS 11242 / SK RZ 11242 SK RS 12242 / SK RZ 12242	22.5” 22.5” 22.5” 22.5” 20” / 22.5” / 24”
80	SK RZ 9030 SK RZ 11030 SK RZ 12030	17.5” 17.5” 17.5”

INTRAAX *plus* / Version IO + IU
- Drum brake -

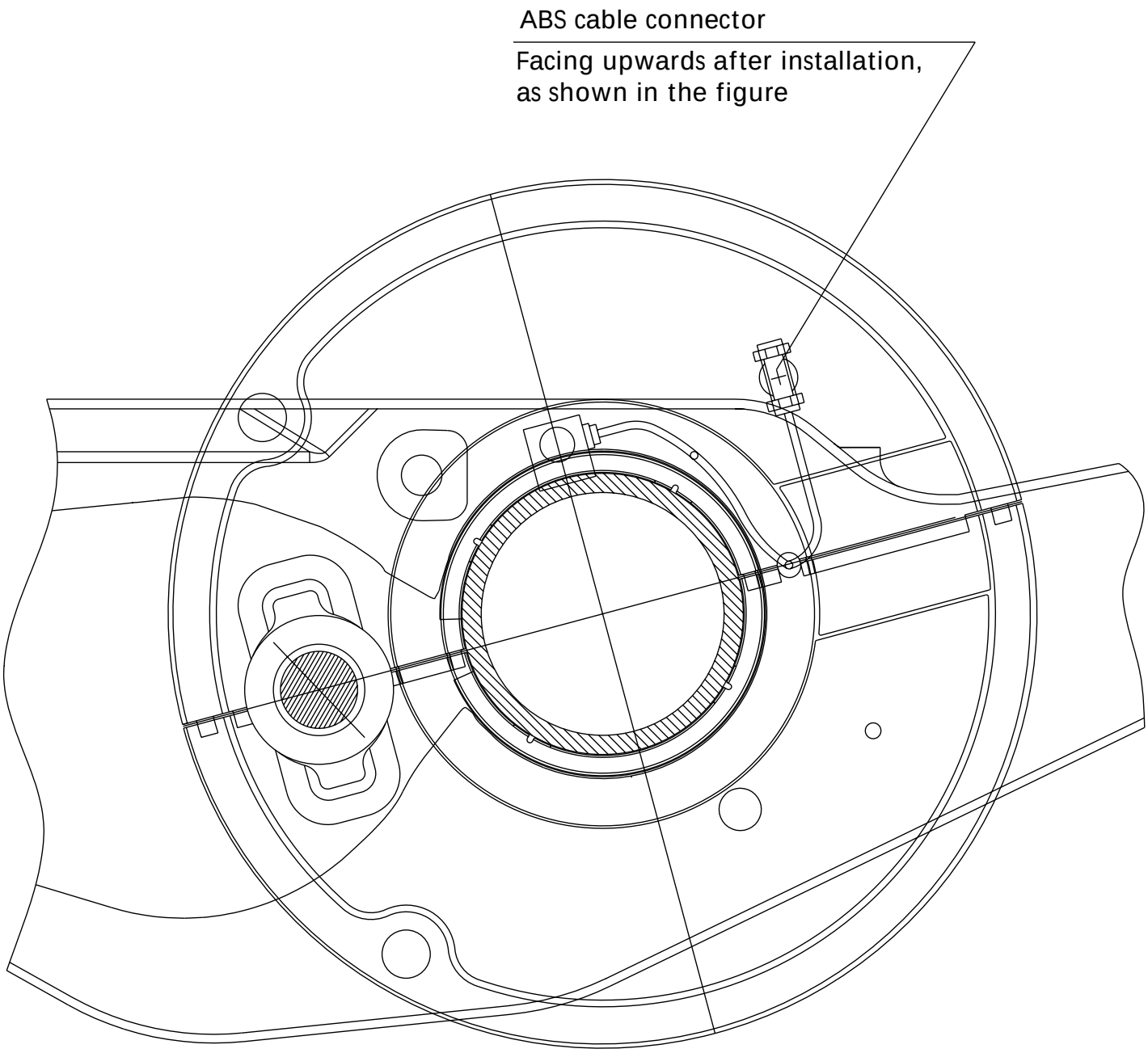

Laying of wear sensor cable for INTRADISC *plus* with KNORR continuous wear indicator

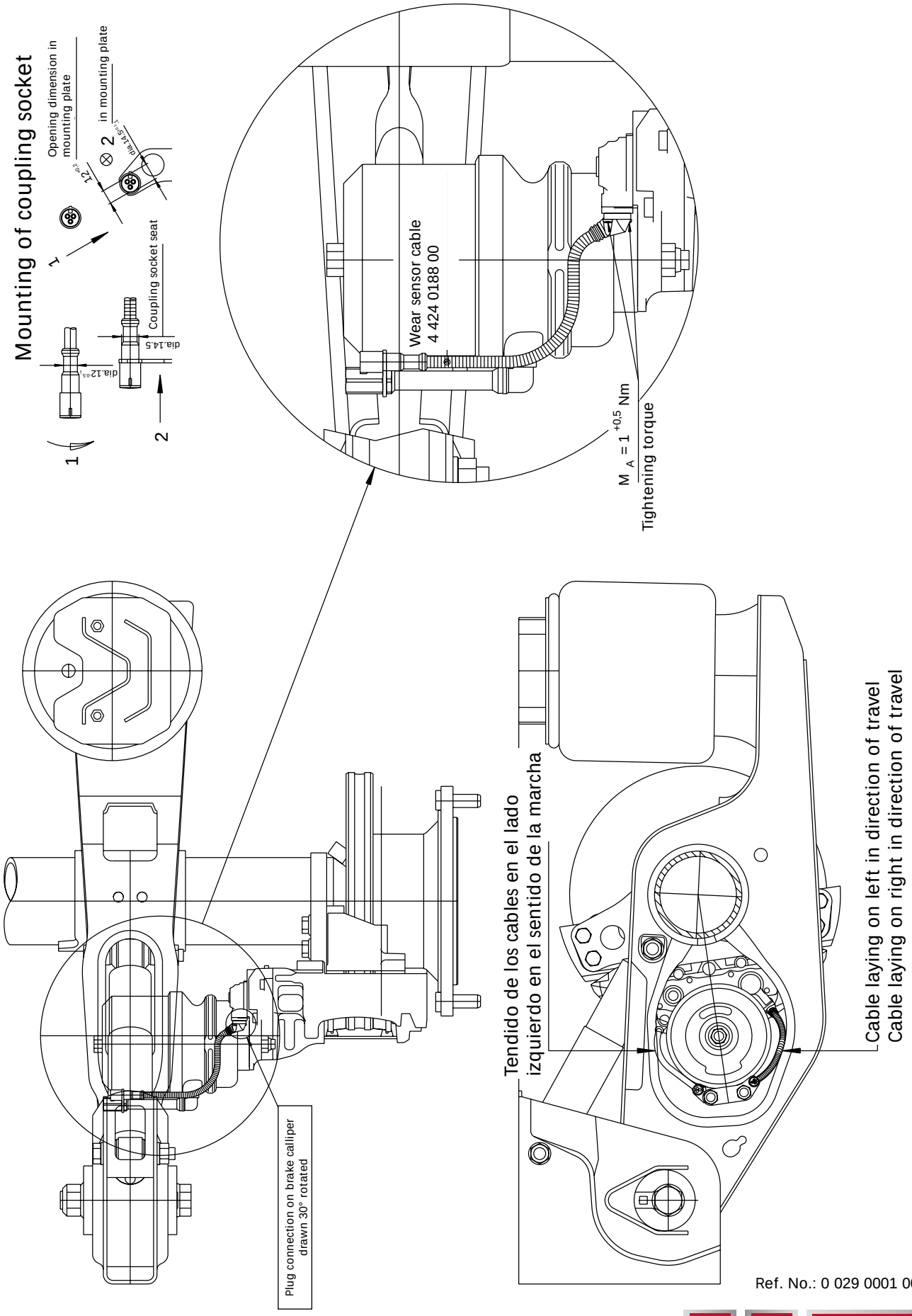

Ref. No.: 0 029 0001 00 A

Wear sensing with SAF evaluation unit – electric limit value indicator

Brake		Component	Part No.	No. of axles 1	2	3	4
				No. of components			
19.5”	SBK 1937 (KNORR SB6...)	Connecting cable kit	3 424 2005 00	1	2	3	4
	SBH 1937 (HALDEX DB19 HD)		3 424 2006 00	1	2	3	4
	SBW 1937 (WABCO PAN19-1)		3 424 2001 00	1	2	3	4
22.5”	SBK 2243 (KNORR SB7)		3 424 2004 00	1	2	3	4
	SBH 2243 (HALDEX DB20)		3 424 2006 00	1	2	3	4
All brakes		Connecting cable 8,000 mm	4 424 2002 00	2	4	6	8
		Evaluation unit kit	3 427 0034 00	1	1	1	1

Wear sensing with WABCO – electric limit value indicator

Brake		Component	Part No.	No. of axles 1	2	3	4
				No. of components			
19.5”	SBK 1937 (KNORR SB6...)	Connecting cable kit	3 424 2005 00	1	2	3	4
	SBH 1937 (HALDEX DB19 HD)		3 424 2006 00	1	2	3	4
	SBW 1937 (WABCO PAN19-1)		3 424 2001 00	1	2	3	4
22.5”	SBK 2243 (KNORR SB7)		3 424 2004 00	1	2	3	4
	SBH 2243 (HALDEX DB20)		3 424 2006 00	1	2	3	4
All brakes		Connecting cable WABCO EBS	Not yet available				

Important information

Market demand: Wheel bolt overhang as short as possible.
SAF has met this market demand.
From May 2000, the axles are delivered as follows:

Axles for steel wheels:
Identification in the number system with number **48**, e.g. 182 90 98 7 **48** 0
Wheel bolt overhang from hub flange 46 mm.

Suitable for: Steel wheels. Aluminium wheels can only be fitted with sleeve nuts in conjunction with 32 mm dia. wheel bolt bore

Axles for aluminium wheels:
Identification in the number system with number **49**, e.g. 182 90 98 7 **49** 0
Wheel bolt overhang from hub flange 56 mm.

Suitable for: Aluminium wheels with normal nuts, wheel with bolt hole diameter 26 mm.
Aluminium wheels with sleeve nuts in conjunction with 32 mm dia. wheel bolt bore.
Steel wheels allowing for a thread overhang of approx. 19 mm

The attached drawing shows the condition steel wheels / aluminium wheels.

Wheel mounting for steel wheels

For steel wheels with offset 120
For aluminium wheels with offset 120 – bolt hole diameter 32 mm

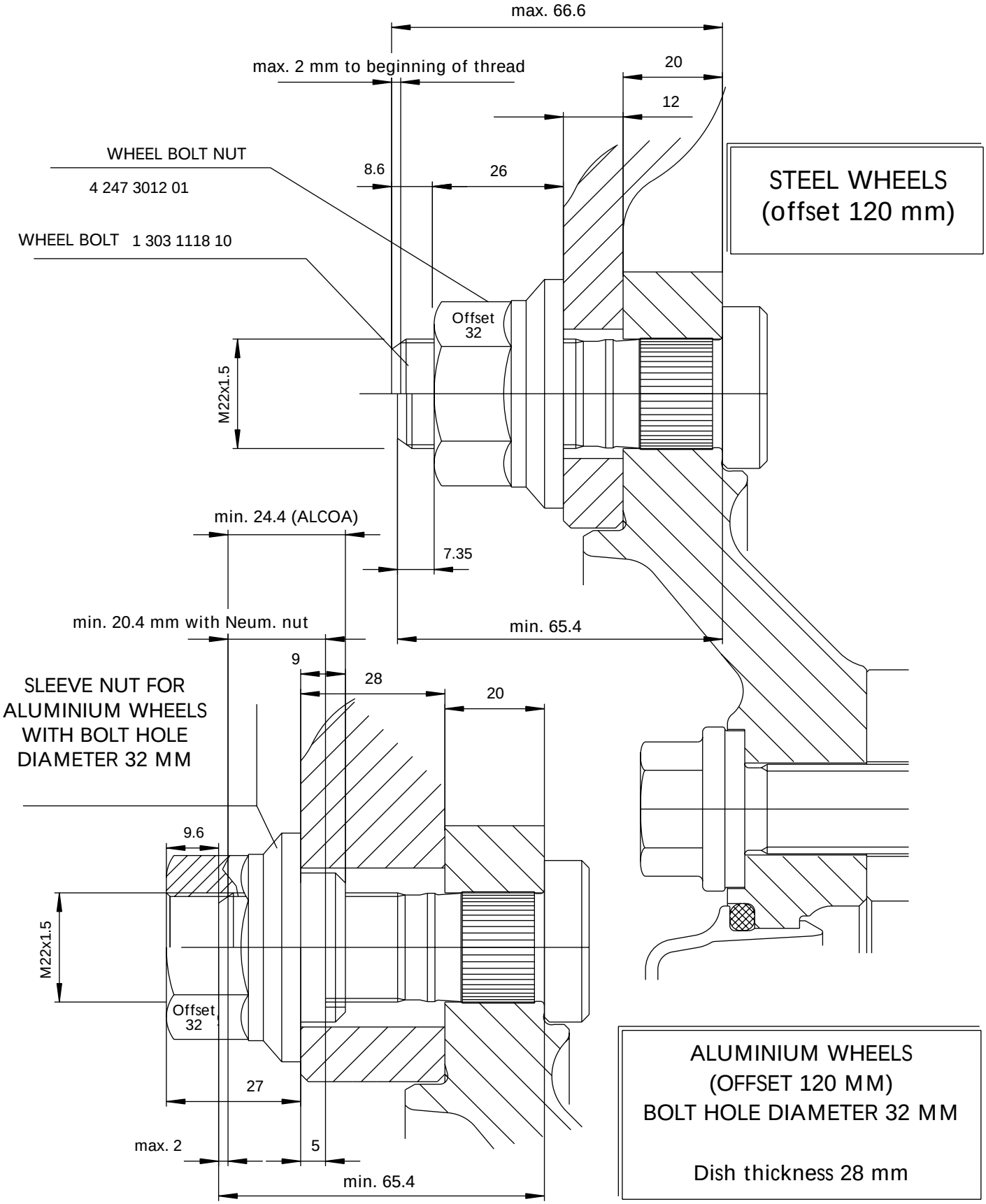

Ref. No.: STAHLRAD260899

Wheel mounting for aluminium wheels

For steel wheels with offset 120
For aluminium wheels with offset 120 – bolt hole diameter 26 mm

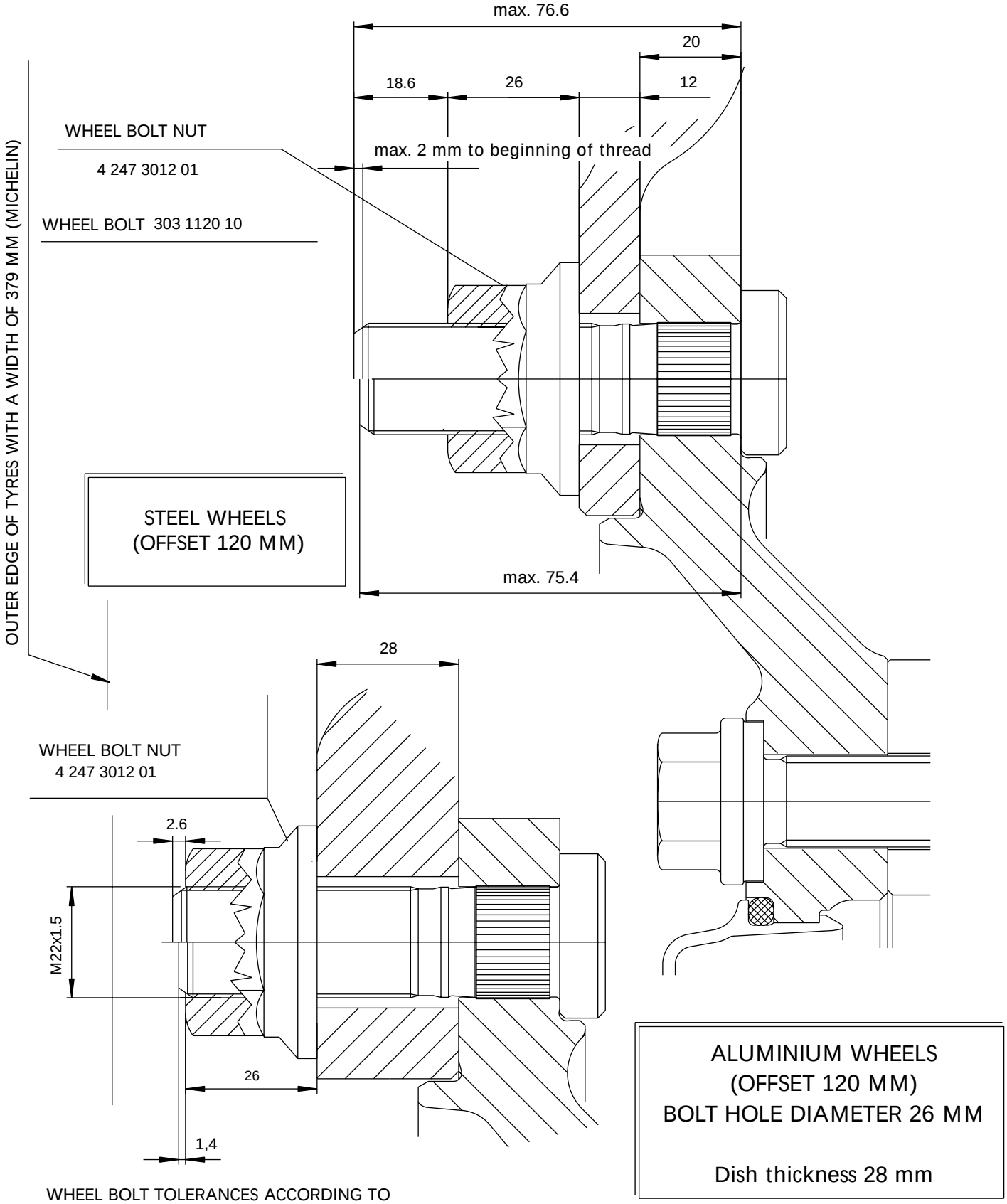

WHEEL BOLT TOLERANCES ACCORDING TO MANUFACTURER'S SPECIFICATIONS

Ref. No.: ALU260899

SAF ACTUAL

Customer orientated, precise, longlasting: the SAF-O-meter, the kilometre counter from SAF for trailer vehicles.

- For quickly assimilating data about running performances for trailer vehicles – especially those which have frequently changing vehicle combinations – a separate, easy to use and without any additional equipment required method of counting kilometres is necessary.

- Kilometre counting devices that go under the well-known name of "Hubodometer" can often lead to considerable compromises because of their various external dimensions when fitted to different wheel caps

Important features:

- Protection from external damage leading to premature malfunction

- Simple and foolproof installation

- Original works and replacement parts

The advantages for you are:

- **The new SAF-O-meter is optimally protected from stone strikes**

- **Effective immediately, the SAF-O-meter can be fitted to order on certain axle types exworks.**

- **A retrofitted assembly is also possible without any problem.**

- **The SAF-O-meter combines high functionality together with an attractive appearance.**

Installation in SAF SK axle types for wheels with a rim depth of 0 mm e.g. SK RS 9042

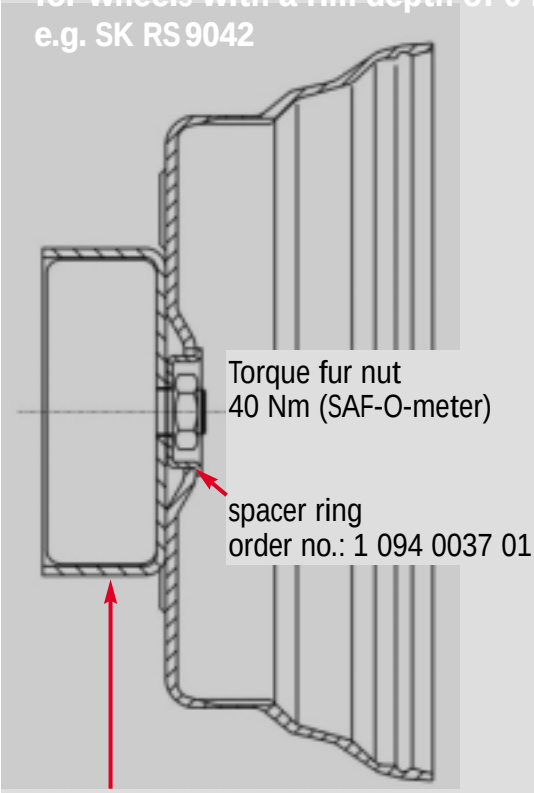

protection cap order no.: 1 337 0036 01

(Delivery only loose possible)

Installation in SAF SK axle types for wheels with a rim depth 120 mm e.g. SK RB 9022

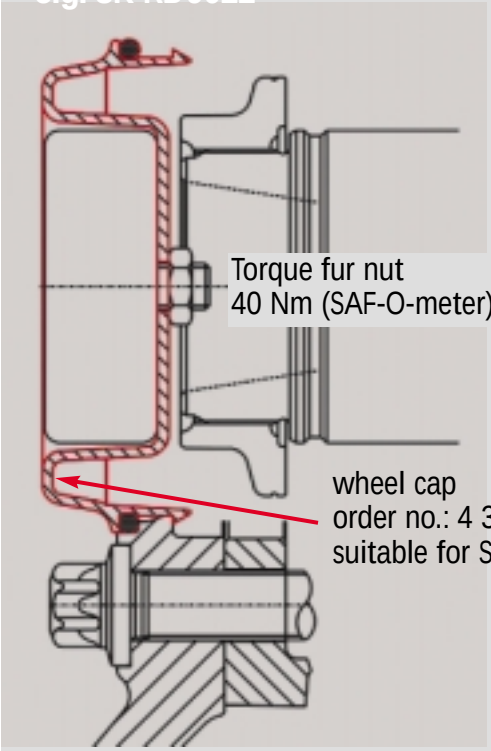

(fitted at delivery possible)

Both sketches show independently the axle types on which the SAF-O-meter is fitted in the wheel caps. It is not important on which side of the vehicle it is fitted as the counter functions independently of the direction of rotation of the covered distance.

Designation:

Tire size	425/65 R 22.5	385/65 R 22.5	11 R 22.5 295/80 R 22.5	425/55 R 19.5	445/45 R 19.5	265/70 R 19.5	245/70 R 17.5 235/75 R 17.5
Axle load	10,000 kg	9,000 kg	10,000 kg / 11,000 kg	9,000 kg	8,000 kg	10,000 kg	10,000 kg / 11,000 kg
SAF-O-meter Order no.	4 388 0349 00	4 388 0325 00	4 388 0319 00	4 388 0291 00	4 388 0271 00	4 388 0264 00	4 388 0241 00

Axle assembly selection chart by vehicle type

22.5” single tyres
385 / 65 R 22.5”
Axle load 9000 kg

Axle type	Brake	Offset	Suspension system											
									Tank / silo		Tank / silo	Steered axle	Tank / silo / steered axle	Tipper
SK RB 9022K SK RB 9022H	SB..2243-11S	120	INTRADISC *plus*	◯	◯	◯	◯	◯	◯	◯	◯	◯	◯	⊘
SK RB 9019W	SBW 1937-11S	120	INTRADISC *plus*	◯	⊘	⊘	⊘	◯	◯	◯	◯	◯	◯	□
SK RB 9019K	SBK 1937-11S			◯	◯	◯	◯	◯	◯	◯	◯	◯	◯	◯
SK RB 9022K SK RB 9022H	SB..2243-11S	120	MODUL	◯	◯	◯	◯	◯	◯	◯	◯	◯	◯	□
SK RB 9019W	SBW.1937-11S	120	MODUL	◯	⊘	⊘	⊘	◯	◯	◯	◯	◯	◯	□
SK RB 9019K	SBK.1937-11S			◯	◯	◯	◯	◯	◯	◯	◯	◯	◯	□
SK RS 9022K SK RS 9022H	SB..2243-11S	0	MODUL	◯	◯	◯	◯	◯	◯	◯	◯	≠	≠	≠
SK RS 9042 SK 500 *plus*	SNK 420x180	0	INTRAAX *plus*	◯	◯	◯	◯	◯	◯	◯	◯	≠	≠	≠
SK RS 9042 SK 500 *plus*	SNK 420x180	0	MODUL	◯	◯	◯	◯	◯	◯	◯	◯	◯	◯	◯

◯ Permissible

⊘ Only by agreement with SAF

□ not recommended

≠ Not available

Brake cylinders

Type	Manufacturer	Size	SAF Order No. incl. nuts
Diaphragm cylinder	SAF	16” steered trailing axle	3 454 1081 60
		20” steered trailing axle	3 454 1082 60
		16”	3 454 1065 60
		20”	3 454 1067 60
		24”	3 454 1069 60
Double diaphragm cylinder		16/24”	3 454 1077 64
		20/24”	3 454 1079 64

Diaphragm cylinder	KNORR	16” steered trailing axle	3 454 1081 30
		20” steered trailing axle	3 454 1082 30
		14”	3 454 1064 30
		16”	3 454 1065 30
		18”	3 454 1066 30
		20”	3 454 1067 30
		22”	3 454 1068 30
		24”	3 454 1069 30
	WABCO	16” steered trailing axle	3 454 1081 00
		20” steered trailing axle	3 454 1082 00
		16”	3 454 1065 00
		20”	3 454 1067 00
		24”	3 454 1069 00
Combination cylinder	KNORR	14/16”	3 454 1070 31
		16/16”	3 454 1047 31
		16/24”	3 454 1048 31
		18/16”	3 454 1049 31
		20/24”	3 454 1051 31
		24/24”	3 454 1056 31
	WABCO	16/16”	3 454 1047 01
		20/24”	3 454 1051 01
		24/24”	3 454 1056 01
Double diaphragm cylinder	KNORR	16/24”	3 454 1077 31
		20/24”	3 454 1079 31 *
			* not yet available

INTRADISC *plus* are delivered with brake cylinders installed.
Combination and double diaphragm cylinders are equipped with air ports.
Connection: M 16 x 1.5 inside thread
Specification of the brake cylinder equipment when placing the order!